6 EASY-TO-BUILD DRILL PRESS ACCESSORIES

Woodsmith®

www.woodsmith.com

Vol. 28 / No. 163

BISCUIT JOINERY

7 simple techniques for case construction

TABLE SAW JOINERY

the secrets to twin tenons

hassle-free FAST FINISH

$4.95US

03>

0 71896 48442 7

Please display until March 28

A Publication of August Home Publishing

Table of Contents

departments

from our readers
Tips & Techniques 4

all about
Steel Wool 8
Find out why this tried-and-true tool still deserves a place in your shop.

tools of the trade
Measuring Tapes 10
Take a look at the innovative features found on the new generation of measuring tapes.

techniques from our shop
Tips for Installing Knobs & Pulls . . 12
Our best techniques for attaching hardware.

jigs and fixtures
Micro Fence Plunge Base 14
Upgrade your trim or palm router for precision plunge routing with this high-tech base.

tips from our shop
Shop Notebook 26

woodworking technique
Twin Mortise & Tenon 38
Learn the secret to this sturdy joint.

working with tools
The Versatile Biscuit Joiner 40
Seven simple techniques for case construction.

small shop solutions
Drill Press Accessories 44
Accurate holes in less time. All it takes are a few accessories you can build in less than an hour.

finishing room
Quick & Easy Hybrid Finish 46
In finishing, oil and water do mix. And the results are hard to beat.

in the mailbox
Q & A 48

hardware and supplies
Sources 49

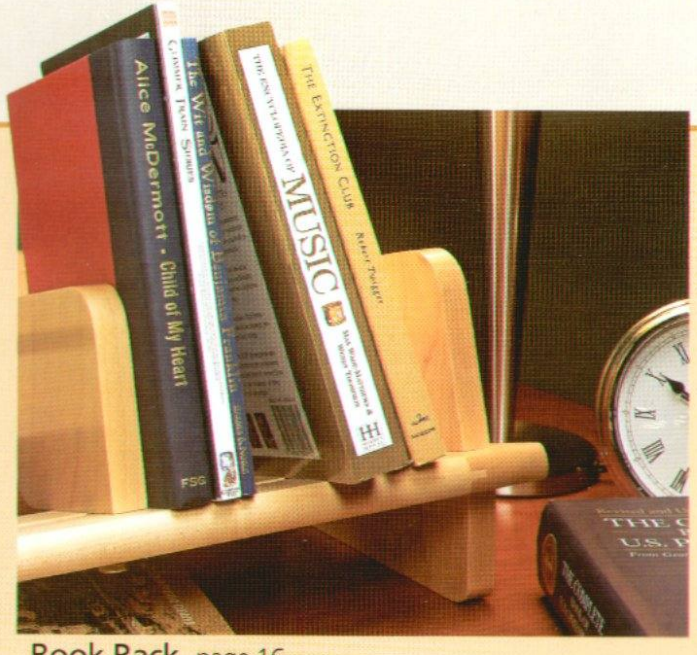

Book Rack page 16

Message Center page 20

features

weekend project

Book Rack 16

This desktop shelf can be built in short order from just a few boards.

designer series project

Message Center 20

With a magnetic chalkboard, writing surface, and storage bin, you'll never miss another event.

DESIGNER'S NOTEBOOK

heirloom project

Craftsman Sideboard 28

Built with solid, mortise and tenon construction, distinctive Craftsman details, and in a perfect size for your home.

details of craftsmanship

Attaching a Top 50

Here are a few of our favorite ways to hold a table or cabinet top in place.

ONLINE EXTRA video workshop

Woodsmith GO ONLINE EXTRAS

These two symbols let you know there's more information online at www.Woodsmith.com. There you'll see step-by-step videos, technique and project animation, bonus cutting diagrams, and a lot more.

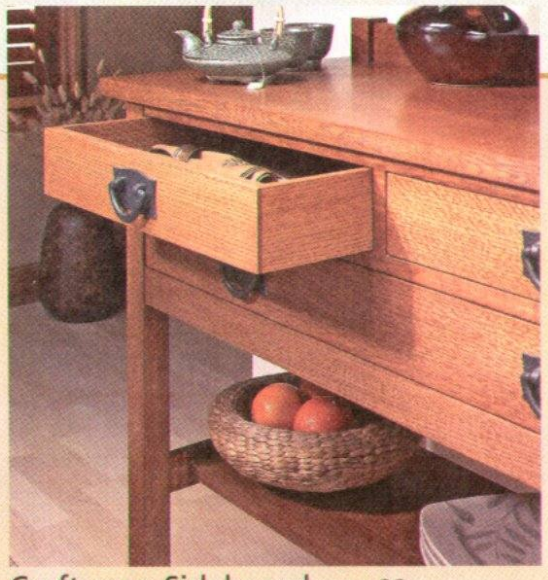

Craftsman Sideboard page 28

editor's note

Sawdust

When it comes to attaching a rail to a leg, a standard mortise and tenon joint is going to be the answer nine times out of ten. You have a nice, wide (tall) tenon that provides a good glue surface with the long grain of the leg. But what happens when you turn the rail sideways to create a drawer opening, like we did on the Craftsman Sideboard featured on page 28? Now, the wide tenon is matching up with end grain in the leg, which is a poor glue surface. So you need to "turn the tenon" to realign it with the long grain of the leg. The only problem is, now the tenon is rather short, so you don't have a lot of glue surface. The solution — a twin tenon. With two side-by-side tenons on the end of the rail, you have a strong joint with plenty of glue surface. For the complete story on twin tenon joints and the secrets to making them on your table saw, check out the article beginning on page 38.

Solving a tricky problem with a unique joint is one of the things I enjoy about woodworking. But sometimes, you want to put a project together as quickly and efficiently as possible. When speed is what I need, I turn to a biscuit joiner.

However, quick doesn't always mean accurate. So we've put together the techniques we use in our shop to guarantee you'll get foolproof results. Nothing complicated or tricky, just simple techniques you can use to achieve better results with a biscuit joiner.

Terry

FREE TIPS BY EMAIL

Now, you can have the best, time-saving secrets, solutions, and techniques sent directly to your computer. Just go to www.Woodsmith.com and click on "FREE Tips by Email" to sign up. You'll receive a new tip by e-mail each week.

Tips & Techniques

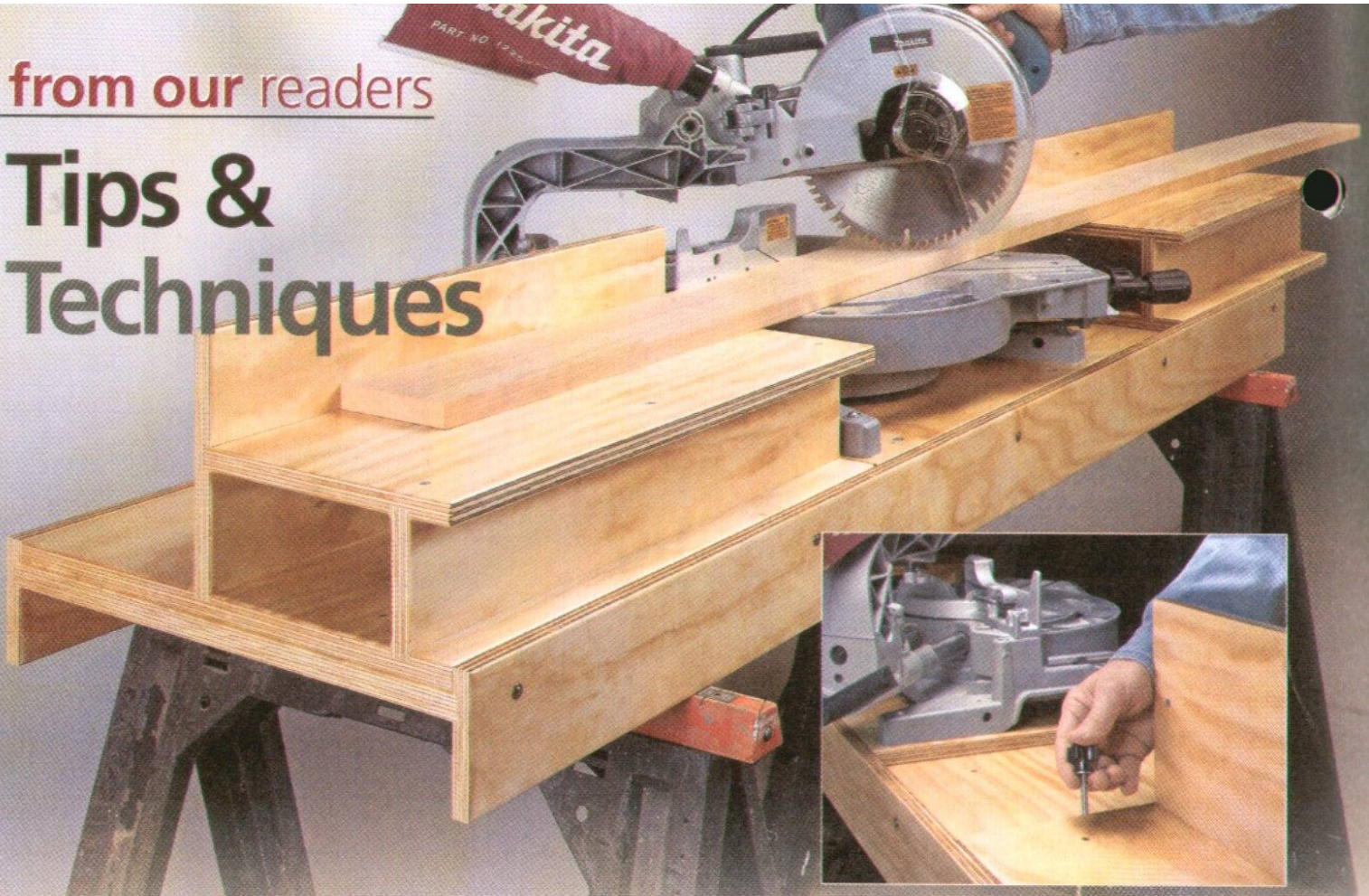

Portable Miter Saw Station

I recently began a remodeling project in my house, and walking back and forth to my garage shop to use my miter saw became aggravating. What I needed was a way to use my miter saw at the jobsite. The answer is the portable station you see above.

This portable station has four basic components: a sturdy base, a platform for the miter saw, and two extendable wings (see drawing below). These components are designed to be easily assembled and disassembled. This makes it easy for one person to carry it through all the twists and turns in a house. Yet, the station is beefy enough for daily use in my shop.

For maximum strength, the wings are put together with grooves and screws. The wings and saw platform fit tightly between the front and back rails of the base. The platform is attached with bolts and T-nuts. The wings are held in place along the base with T-nuts and star knobs (inset photo above). When extended, the wings should not overhang more than half of their length so they'll stay balanced.

This portable station has been a true life saver. I can quickly and easily take my miter saw with me wherever I need it and have it be just as accurate on the jobsite as it is in my garage shop.

Serge Duclos
Delson, Quebec, Canada

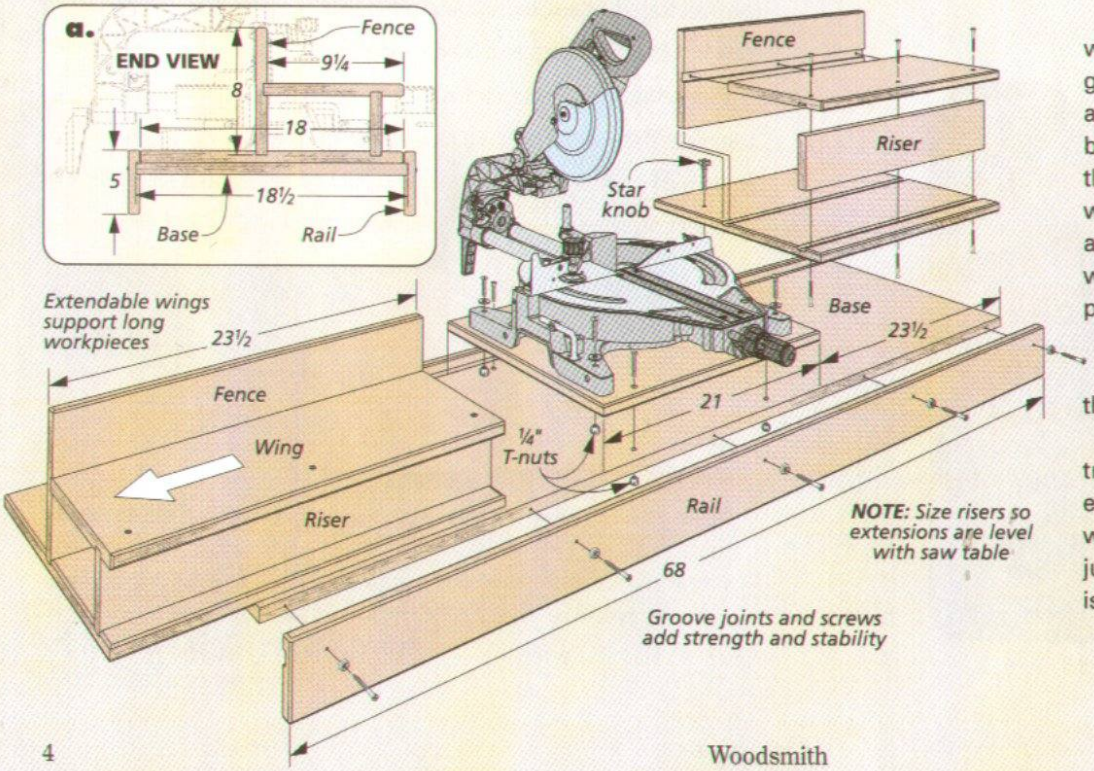

Biscuit Joint Miter Jig

I make a lot of biscuit-joined frames in my shop, so I needed a way to quickly and consistently cut the biscuit slots in the mitered faces. To maintain accuracy over multiple pieces, I created the jig you see in the drawing at right. It gives me perfect results every time.

The jig consists of a beveled guide block glued up from five layers of plywood attached to one end of a 3'-long base (see drawing below). One end of the block is cut on a 45° angle from top to bottom before mounting it onto the base. Fences attached to the base keep the workpiece steady while the slot is cut.

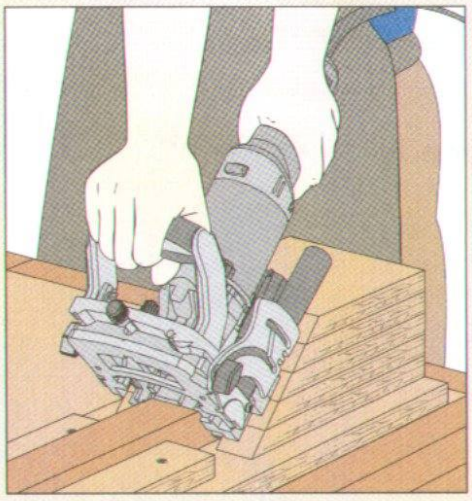

You'll notice in the main drawing below there's a notch cut into the guide block's bottom layer of plywood. This notch allows the workpiece to slide under my biscuit joiner a little to get the slot located correctly on the workpiece.

To set up the jig, slide a workpiece that's been mitered at a 45° angle into the notch and attach the fences to the base on either side. Next, position the biscuit joiner against the angle of the block and line it up with the workpiece.

When everything looks right (detail 'a'), I then attach the biscuit joiner to the block by running screws through holes in the joiner's bottom plate.

To cut the slot, slide the frame stock between the fences and into the notch. Then simply push down on the biscuit joiner. This jig has saved me a great deal of time and increased the consistency and accuracy of my frame-making.

John D. Princell
Brooklin, Maine

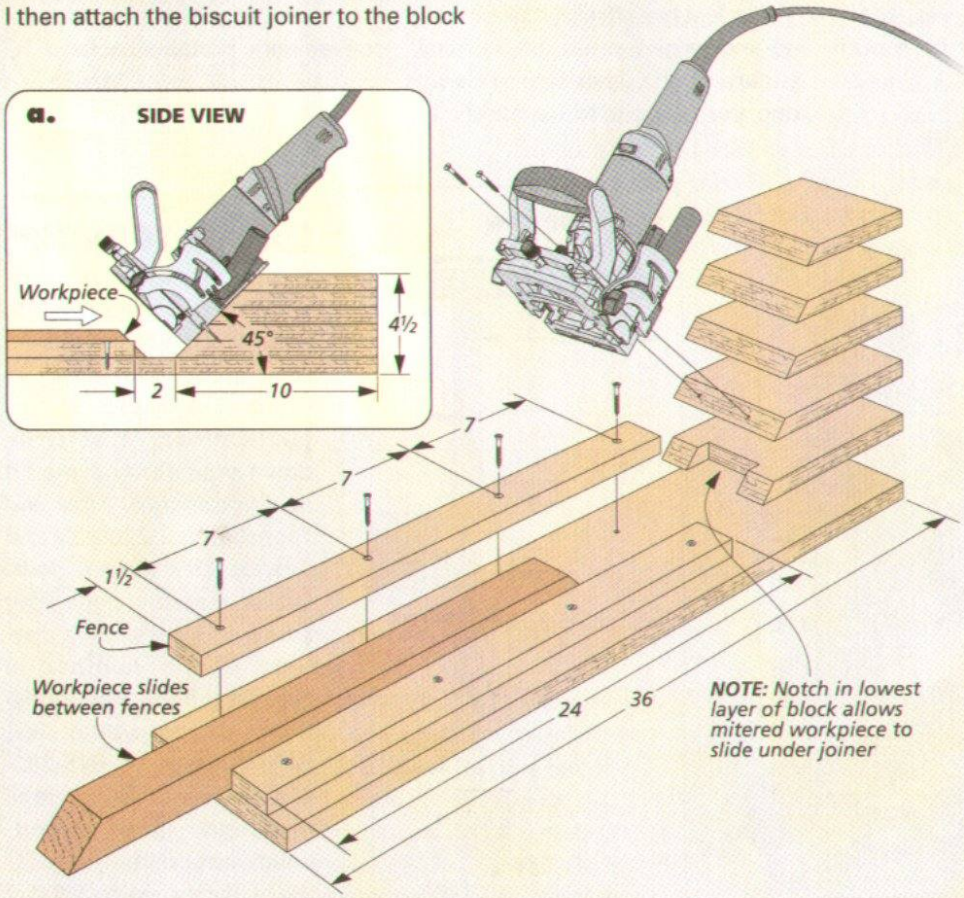

Woodsmith

No. 163 February/March 2006

PUBLISHER Donald B. Peschke

EDITOR Terry J. Strohman

SENIOR EDITORS Vincent Ancona, Bryan Nelson
ASSOCIATE EDITORS Phil Huber, Ted Raife
ASSISTANT EDITORS Ron Johnson, Mitch Holmes, Randall A. Maxey, Dennis Perkins

EXECUTIVE ART DIRECTOR Todd Lambirth
SENIOR ILLUSTRATORS David Kreyling, Dirk Ver Steeg, Harlan V. Clark
ILLUSTRATORS David Kallemyn, Peter J. Larson

CREATIVE DIRECTOR Ted Kralicek

SENIOR PROJECT DESIGNERS Ken Munkel, Kent Welsh, Chris Fitch
PROJECT DESIGNERS/BUILDERS Mike Donovan, John Doyle
SHOP CRAFTSMEN Steve Curtis, Steve Johnson
SR. PHOTOGRAPHERS Crayola England, Dennis Kennedy
ASSOCIATE STYLE DIRECTOR Rebecca Cunningham
ELECTRONIC IMAGE SPECIALIST Allan Ruhnke
VIDEOGRAPHERS Craig Ruegsegger, Mark Hayes

Woodsmith® (ISSN 0164-4114) is published bimonthly (Feb., Apr., June, Aug., Oct., Dec.) by August Home Publishing Company, 2200 Grand Ave, Des Moines, IA 50312.

Woodsmith® is a registered trademark of August Home Publishing.
Copyright© 2006 August Home Publishing Company. All rights reserved.

Subscriptions: Single copy: $4.95. One year subscription (6 issues), $24.95. (Canada/International add $10 per year, U.S. funds.)
Canadian Subscriptions: Canada Post Agreement No. 40038201. Send change of address information to PO Box 881, Station Main, Markham, ON L3P 8M6. Canada BN 84597 5473 RT
Periodicals Postage Paid at Des Moines, IA and at additional offices.
Postmaster: Send change of address to *Woodsmith*, Box 37112, Boone, IA 50037-2112.
Subscription Questions? Write to *Woodsmith*, P.O. Box 842, Des Moines, IA 50304 or call 1-800-333-5075, 8:00 am to 5:00 pm, Central Time, weekdays. Or send an email to: orders@woodsmith.com
Email: woodsmith@woodsmith.com
World Wide Web: http://www.Woodsmith.com

www.Woodsmith.com

ONLINE SUBSCRIBER SERVICES

- **ACCESS** your account
- **CHECK** on a subscription payment
- **TELL US** if you've missed an issue
- **CHANGE** your mailing or e-mail address
- **RENEW** your subscription
- **PAY** your bill

Click on "Subscriber Services" in the list on the left side of our home page. Menus and forms will take you through any of the account-maintenance services you need.

HOW TO REACH US:
FOR SUBSCRIPTIONS, ADDRESS CHANGES OR QUESTIONS, WRITE OR CALL:
Customer Service
2200 Grand Ave., Des Moines, IA 50312
800-333-5075 8 a.m. to 5 p.m. CT

OR VISIT OUR WEB SITE:
www.Woodsmith.com

AUGUST HOME PUBLISHING COMPANY

Printed in U.S.A.

Portable Workbench

I recently installed cabinets in my kitchen and needed a worksurface that was small and portable. But it also had to have some of the same features as my full-size workbench. My answer is the small workbench in the photo at right.

Since it needs to take the same abuse that my shop workbench does, I made it strong enough to handle the punishment. All of the parts, except for the shelf, are made from "two-by" stock. And it's all put together with simple, yet sturdy joinery that won't loosen up with hard use over time.

The shelf is located between the braces and is screwed along the bottom edge of the braces.

The benchtop has holes in it for bench dogs, just like my workbench does. Plus, it extends quite a bit over one end (detail 'a'). Not only does that extra length give me good clamping areas, but it also allows for a bird's mouth notch for cutting with a jigsaw or drilling through holes.

The feet are offset to the extended end to give me a flat, vertical surface on the other side to clamp doors or plywood to the bench.

Now, this workbench has all the strength and practicality of my shop workbench in a sturdy, yet conveniently portable package.

Mark Holmes
Hampton, Georgia

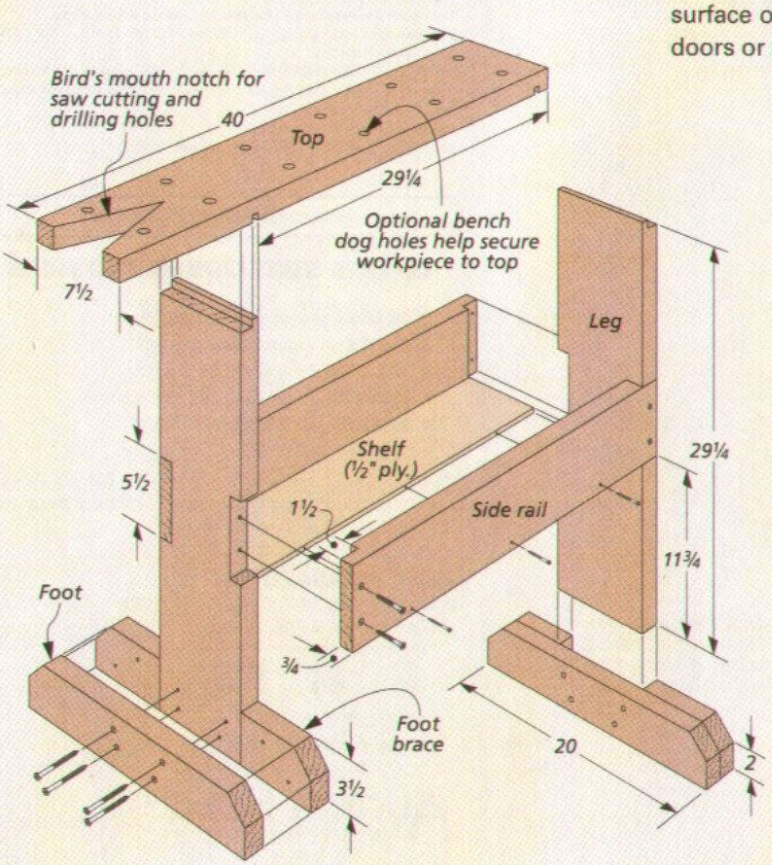

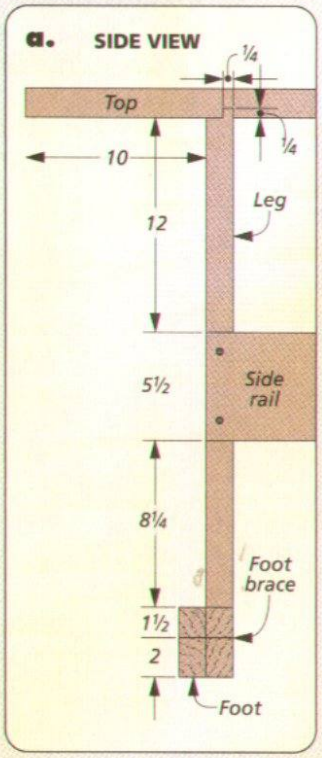

SUBMIT YOUR TIPS

If you have an original shop tip, we would like to hear from you and consider publishing your tip in one or more of our publications. Just write down your tip and mail it to: *Woodsmith,* Tips and Techniques, 2200 Grand Avenue, Des Moines, Iowa 50312. Please include your name, address, and daytime phone number in case we have any questions. If you would like, FAX it to us at 515-282-6741 or send us an email message at: woodsmith@woodsmith.com. We will pay up to $200 if we publish your tip.

Electric Cord Cleat

It seems I'm always fighting to keep the electrical cords from getting damaged when I move my power tools around. To eliminate this problem, I made simple cord cleats, like the one you see pictured on the right.

I drilled a 1" hole in the center of a 1¾" x 11" piece of ¾" hardwood to hold the plug. Then, I cut a slot to the hole so I could slide the cord into the cleat. Each "wing" is 2½" long, which is large enough to wrap most cords around.

Then, all I have to do is mount the cleat to the tool, and the cords stay neatly out of the way.

Wesley Henson
Enka, North Carolina

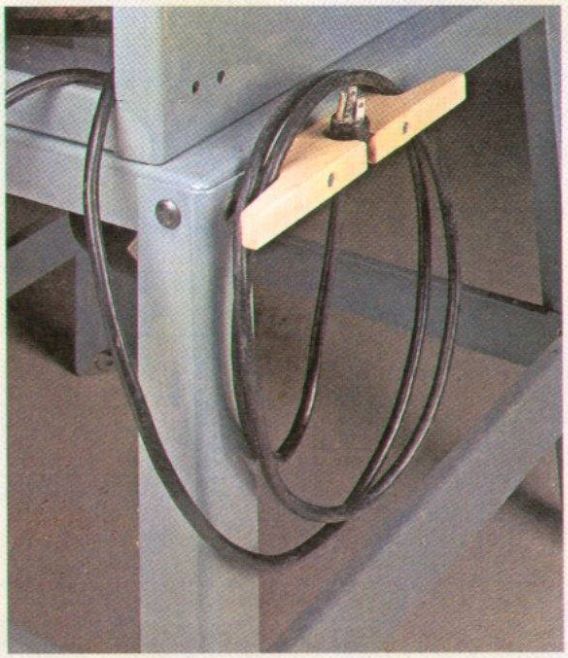

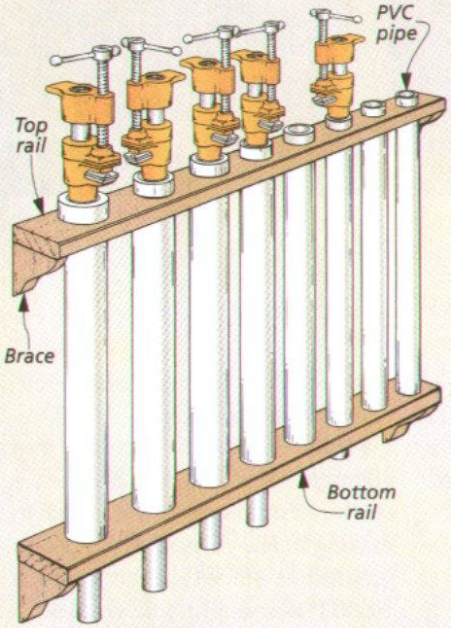

PVC Clamp Rack

For a long time, I used a pipe clamp rack that consisted of a couple of rails, each with a row of holes. The problem I found with this type of rack was that I always had a hard time trying to slip the end of the clamp through the hole in the bottom rail. And some of my clamps were too short to reach these holes.

To solve this problem, I made a new clamp rack with PVC sleeves. I simply drilled holes in both the top and bottom rails to match the PVC. Then I glued a length of PVC pipe in each pair of holes. Now I don't have any problem sliding the clamp right into its "holster."

Roger Boldt
Valders, Wisconsin

Quick Tips

LADDER LUMBER STORAGE

I have an old 5' wooden ladder that's not safe to use anymore. But rather than throw it away, I use it for lumber storage.

The ladder provides a five-tier storage system that holds different lengths — longer boards at the bottom and shorter lengths at the top. And, best of all, it organizes quite a bit of lumber in a small amount of floor space.

Dan Kelts
Peoria, Illinois

ZERO-CLEARANCE TOP

When cutting small parts on my table saw, I slip a piece of ¼" hardboard over the blade that covers the length of the table. This zero-clearance "auxiliary top" helps keep the workpiece perfectly level between the table and the saw insert. I also added a "hook" over the front end of the auxiliary top to keep it from being pushed through the blade.

Renee Kelly
Oklahoma City, Oklahoma

GUTTER PARTS BIN

A long, continuous parts bin can be made with a leftover piece of roof gutter. It can be mounted almost anywhere, and you can easily add dividers by screwing through the bottom and front.

Jack Smith
Atlanta, Georgia

Win This Porter-Cable Variable Speed Router

That's right, send us your shop tips. If your tip or technique is selected as the featured reader's tip, you'll win a Porter-Cable variable speed router just like the one shown here. Send your tips and techniques to: *Woodsmith,* Tips and Techniques, 2200 Grand Avenue, Des Moines, Iowa 50312. Or send us an email message at: woodsmith@woodsmith.com.

The Winner!

Congratulations to Serge Duclos of Delson, Quebec, Canada. His portable miter saw station was selected as the winner of the Porter-Cable router. His station allows him to take his miter saw right where he needs it.

To find out how you could win a Porter-Cable variable speed router, check out the information on the left.

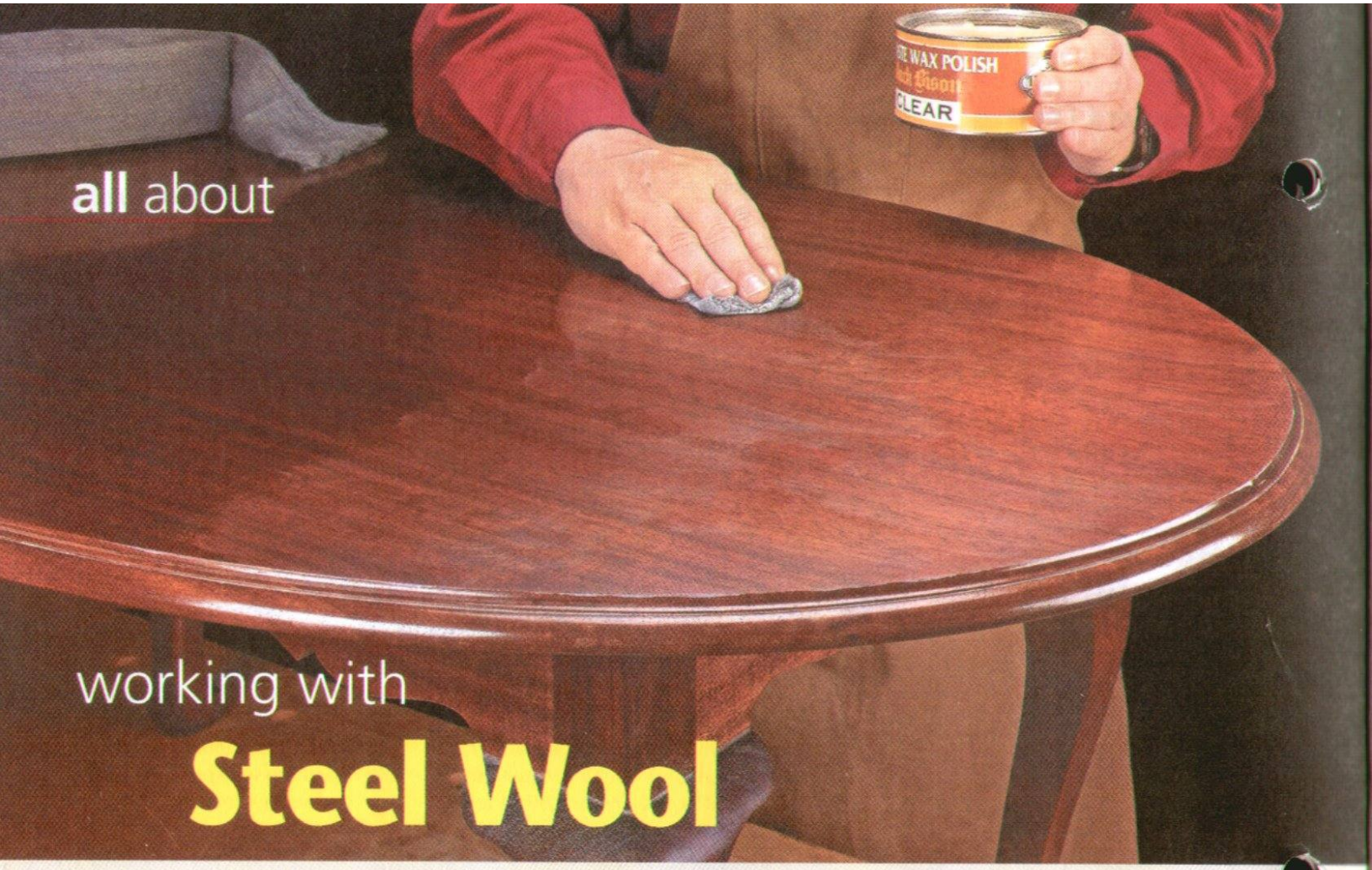

all about

working with Steel Wool

Although it's been around for generations, for some woodworking tasks, you still can't beat steel wool.

Like sandpaper or glue, steel wool is one of those shop items that's been around for so long we don't give it a second thought. But take a closer look, and you'll see why there's more to steel wool than meets the eye.

HOW IT'S MADE. Steel wool is nothing more than loosely woven strands of steel. The strands are created by dragging steel wire across serrated blades. The strands are then gathered together and processed into large rolls, or cut and folded into convenient-size pads.

GRADES. Steel wool is sorted into eight grades, depending on the size of the strands that are used in making it. The coarsest grade is designated as #4, while the finest is #0000 ("four-aught"). If you take a look at the photos at left, you can see the difference between the two.

Every package of steel wool I've ever seen has a chart similar to the one on the opposite page that spells out which of the eight grades to use for a particular task. But the truth is, I rarely use anything but #0000 and #00 steel wool in my shop. (Occasionally, I'll use one of the coarse grades for stripping furniture finishes or removing heavy rust.)

STEEL WOOL FOR CLEANING. One of the main uses for steel wool that I've found in my shop is cleaning and removing rust from the metal surfaces of tools and equipment.

In this close-up photo, the strands of a pad of #4 steel wool look almost like razor wire.

At the other end of the spectrum is this pad of super-fine, #0000 steel wool.

Any time the top of my table saw or some other shop tool gets a build up of rust or grime, a quick rub-down with some #0 or #00 steel wool usually has it looking like new again.

STEEL WOOL FOR FINISHING. With all the synthetic abrasive finishing pads on the market today, you might wonder why anyone would still use steel wool for finishing. Well, even though I do use abrasive pads for some tasks, I've found that when it comes to rubbing out a finish, there's still nothing that beats #0000 steel wool.

The abrasive nature of #0000 steel wool is so gentle that you don't have to worry about cutting through the surface of the finish like you do with sandpaper. And unlike abrasive pads, steel wool conforms better to curves, so it's a good choice for use on moldings or turnings.

Another place where I like to use steel wool is when I'm waxing a piece of furniture. A #0000 steel wool pad makes a great applicator because it has just enough "bite" to work the wax into the finished surface of the workpiece.

DISADVANTAGE. There's one downside that I've discovered when it comes to steel wool. It tends to leave behind tiny steel fibers. On unfinished wood surfaces, these fibers can get caught in the pores of the wood. And if you're using a water-based finish, they can rust and ruin your finish. In this case, I use steel wool only for rubbing out the *final* coat of finish. For the intermediate coats, I stick with a fine grade of sandpaper.

HIGH-QUALITY STEEL WOOL. For tasks like removing rust or stripping a finish, there isn't much difference in quality between one brand of steel wool and another. But for finishing jobs, I prefer to use a high-quality steel wool like *Liberon*.

This steel wool is made from a high grade of steel. It's less prone to crumbling and shredding like the typical steel wool you might find at a hardware store. In addition, the strands of steel are more consistent, so there's less of a chance of a stray strand of coarser steel scratching your finish (see photos above).

Liberon makes one other claim about their steel wool — it's virtually oil-free. Steel wool made by other manufacturers contains oil from the production process. (The oil prevents the steel wool from rusting.) The problem with this is that the oil in the steel wool can react with some types of finishes, preventing them from adhering properly.

Liberon steel wool isn't easy to find and it costs a bit more than other brands. (See page 49 for sources.) So I only use it for finishing. For other tasks, I keep some of the less-expensive, hardware-store variety of steel wool handy.

Although synthetic abrasives have come a long way in recent years, steel wool will continue to have a place in my shop. W

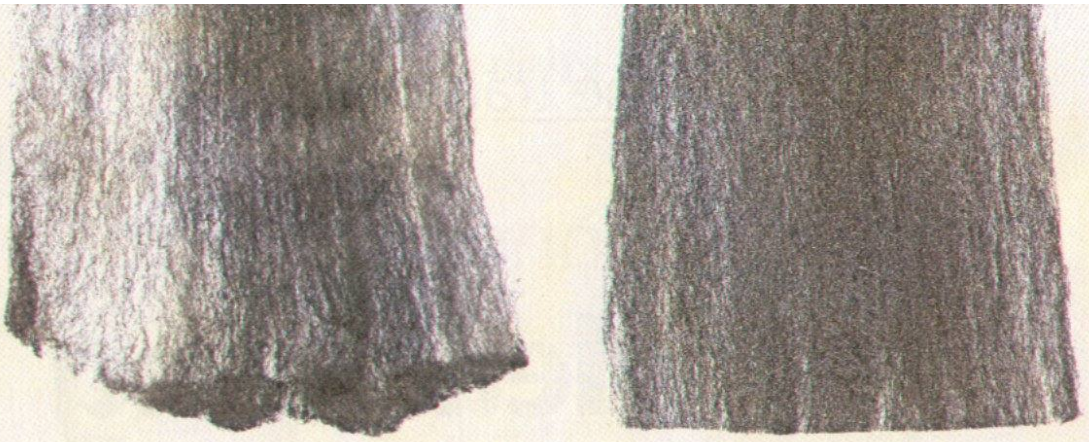

▲ *Liberon* steel wool (shown on right) is excellent for rubbing out a finish because it has even, consistent strands of steel without any "rogue" strands that may mar an otherwise perfect finish. By comparison, the steel wool on the left appears coarser, even though both are #0000.

GRADE	USES
#0000 (Super Fine)	Rubbing out final finish on woodwork. Applying paste wax to fine furniture.
#000 (Extra Fine)	Polishing aluminum, copper, brass, and zinc.
#00 (Fine)	Cutting back gloss finishes to semi-gloss. Cleaning golf clubs, screens, frames.
#0 (Medium Fine)	Removing rust from metal tools. Cleaning tires, chrome, and aluminum.
#1 (Medium)	Prepping wood for first coat of paint. Cleaning rubber and plastic
#2 (Med. Coarse)	Cleaning glass, brick, or stone. Removing rust and dirt from garden tools.
#3 (Coarse) & #4 (Extra Coarse)	Used with chemical strippers to remove old layers of paint and varnish.

Closer Look: Bronze Wool

The one downside to steel wool is that it leaves behind steel fibers that can rust if exposed to moisture. But *bronze* wool (see photo) doesn't have that problem.

Bronze wool can be used in the same fashion as steel wool — for polishing and cleaning. Because of it's non-rusting properties, bronze wool is often used on ships and in marine environments, where rust is a problem.

Unlike steel wool, bronze wool is available in only three grades — coarse, medium, and fine. And because bronze is costlier than steel, bronze wool is more expensive than steel wool. It's also a little more difficult to find. If your local hardware store doesn't carry it, try checking with a store that sells marine and boating supplies.

▲ Because it doesn't rust, bronze wool is often used on ships for polishing brass and woodwork. It costs slightly more than steel wool.

new innovations in Measuring Tapes

The tape measure isn't a single-function tool anymore. New tapes have multiple uses and some great features built right in.

If there's one tool that gets used almost every time I work in the shop, it's my measuring tape. I reach for it to measure long pieces of lumber and even when I need to take smaller, dimensional measurements.

You'll find most measuring tapes look pretty much the same on the outside. And for years there wasn't much difference inside the tape. But that's all changed. Take a look at tape measures today and you'll find a few exciting surprises.

FASTCAP TAPES

The new *FastCap* tapes will give you accurate distance measurements, just like other tapes. But you'll also find a couple of other brand-new features, like the handy built-in pencil sharpener you see in the inset photo at right.

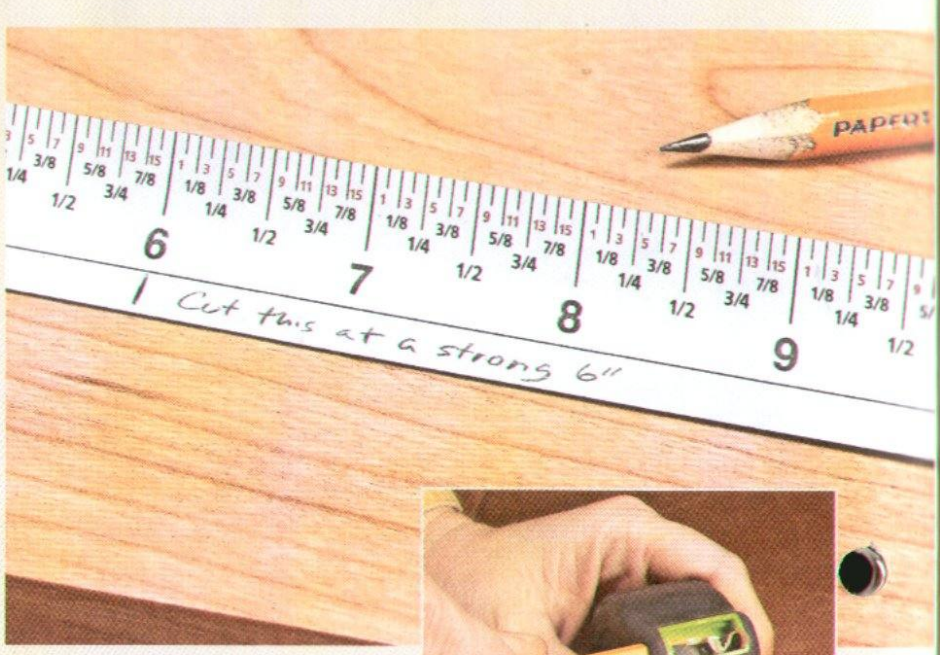

▲ The *Story Pole* tape is designed to be written on with a pencil. It has standard measurements and room at the bottom for writing notes.

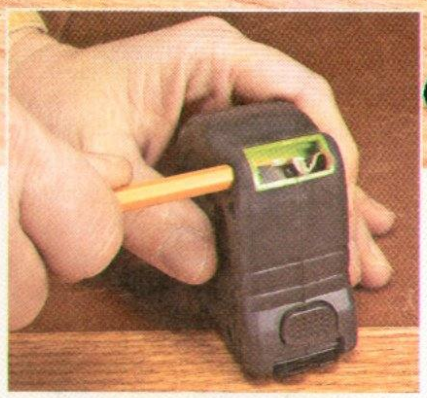

▲ A pencil sharpener built right into the case lets you quickly and easily add a sharp point to your pencil anytime you need it.

Another item you'll find on each of these tapes is a large writing surface on the outside of the case like you see in the photo on the opposite page. This space is designed for you to write short notes and measurements to yourself and then wipe it clean when you no longer need them.

LEFTY/RIGHTY. I'm right handed, so it's more natural for me to read the tape from left-to-right. But whenever I need to set up the fence on my table saw, it's always a lot easier for me to measure the distance if I can position the tape so it can be read from right-to-left, like you see in the photo at left.

If you don't have a tape that reads from right-to-left, you'll find yourself tying to stand on your head as you read the measurement.

Now, you can have it both ways. The tape you see in the photo in the left margin has markings that run along the edges in both directions. This means you can orient the tape in either direction and quickly and easily read the scale.

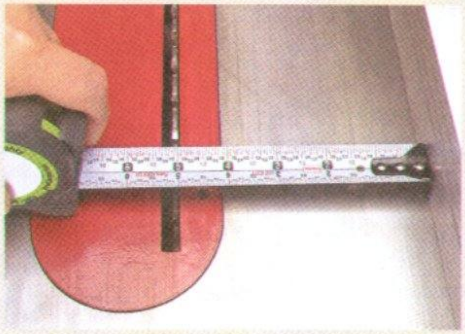

▲ The *Lefty/Righty* tape features a measuring scale along both edges of the blade, so the markings are easy to read whether you're measuring from the left or the right. This feature comes in particularly handy when checking the distance from the rip fence to your saw blade.

STORY POLE TAPE. I often like to mark where the cut should be made or record the length of a rail or stile on the blade of the tape. But, because of the slick finish on most blades, it's difficult to write or make marks you can see clearly.

The blade of the *Story Pole* tape has a matte finish with a blank space at the bottom of the tape (like you see in the top photo on the previous page) that's designed for pencil marks to be added. It's just like having a small note pad inside your measuring tape. This lets you make marks and write notes to yourself directly on the tape.

FLATBACK TAPE. Measuring tapes are great tools. But you'll find the curved cross-section of the blade causes the edge of the tape to remain off the workpiece when it's laid down flat. This makes it difficult to read and mark fine measurements accurately.

This isn't a problem if you're framing a house. But when it comes to fine measurements for cabinet construction, the tape measure is not the tool you're likely to choose for accuracy.

The *FlatBack* tape has eliminated this problem. As you can see in the photo below, the blade has no cross-section curve. This lets the blade lie completely flat on the workpiece and makes it easier to mark with greater accuracy.

You can find sources for these tapes and the other specialty tapes at right by turning to page 49. W

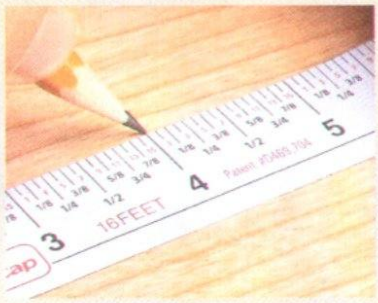

▲ The *FlatBack* tape lies flat on the workpiece. And since the tape is in contact with the surface along the edges, there's no guesswork involved when reading or marking a measurement.

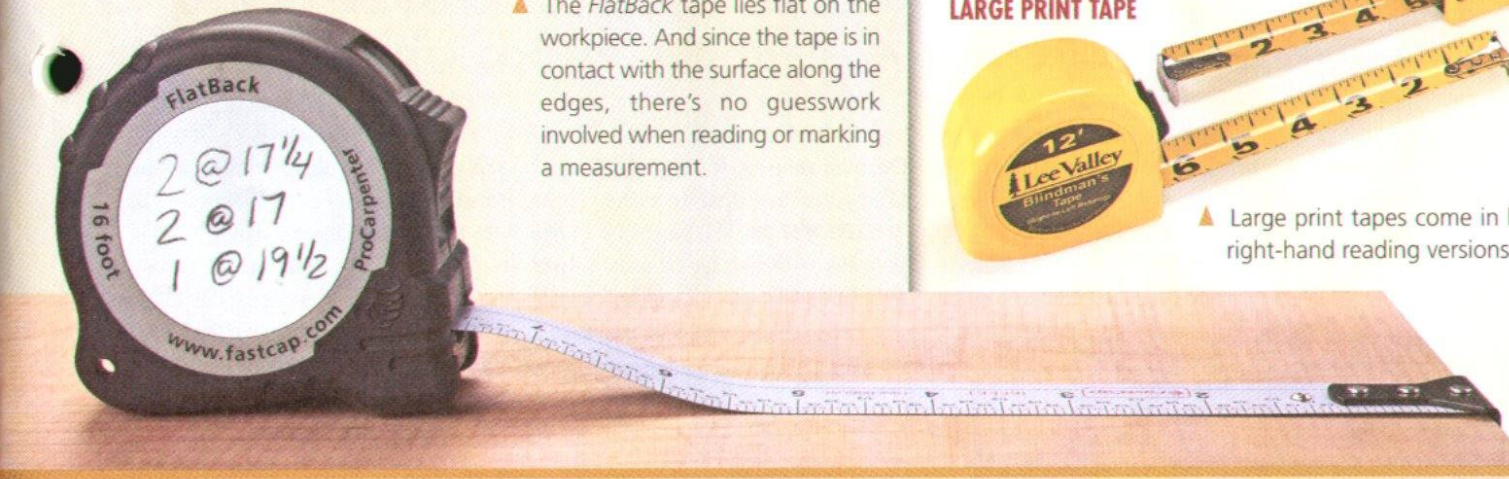

Specialty Tapes

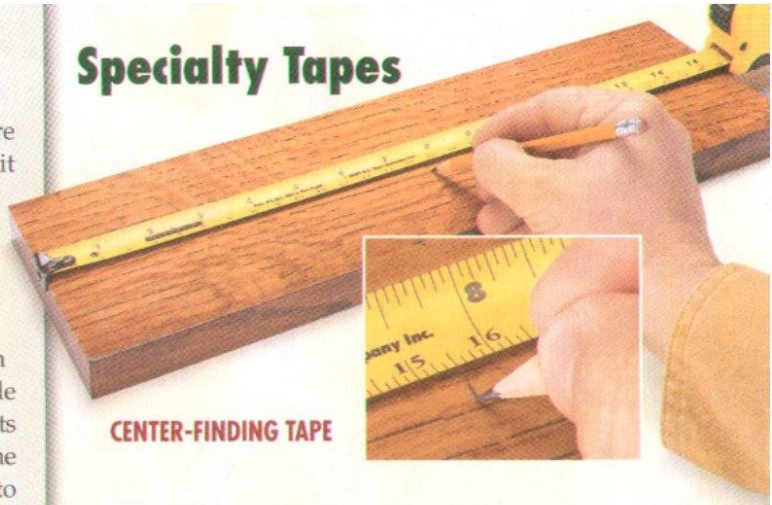

CENTER-FINDING TAPE

CENTER-FINDING TAPE. Finding the center of a workpiece is difficult when you run into fractions, like 23⅞". But center-finding tapes, as shown above, make it easy. The tape has two sets of numbers. The top set is standard inch marks and the bottom one is a half-scale. Just measure the workpiece on the top scale. Then find the same measurement on the bottom scale (see inset above) and that's the centerpoint. It's that easy.

LARGE PRINT TAPE. Low light conditions or tired eyes often make it difficult to easily read the tape. The *Blindman's* tape has large print and markings to make it easier to read the measurements.

LARGE PRINT TAPE

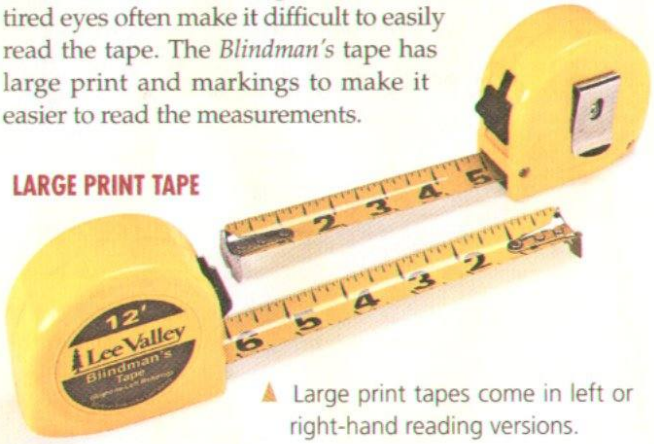

▲ Large print tapes come in left or right-hand reading versions.

What's New: Digital Measuring

Even the best tape measure in the world is only as accurate as the person reading it. To eliminate possible error, the *DigiTape* from *Starrett* has an internal optical sensor that accurately reads a bar code printed on the blade. This gives you two options. You can either read the measurement on the fully graduated blade or the electronic display located on the top of the case.

Your measurements can be viewed in either decimal inches, decimal feet, centimeters, or feet and inches (as shown at right). And they can be saved in the memory. It also automatically adds the length of the case for inside measurements and you can flip the display for easy reading from either side of the tape. All this with the touch of a button.

The digital readout is accurate down to 1/16" and the tape costs less than $50. It comes with a replaceable long-life battery and a set of easy-to-follow instructions.

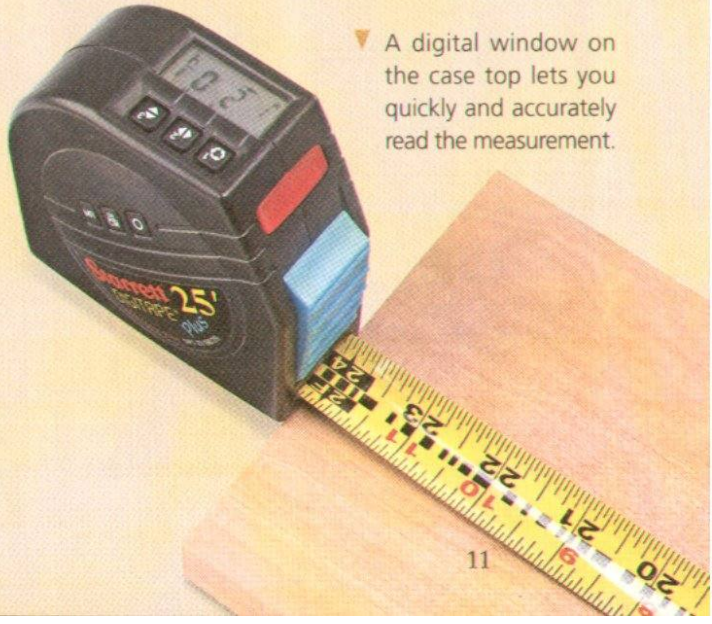

▼ A digital window on the case top lets you quickly and accurately read the measurement.

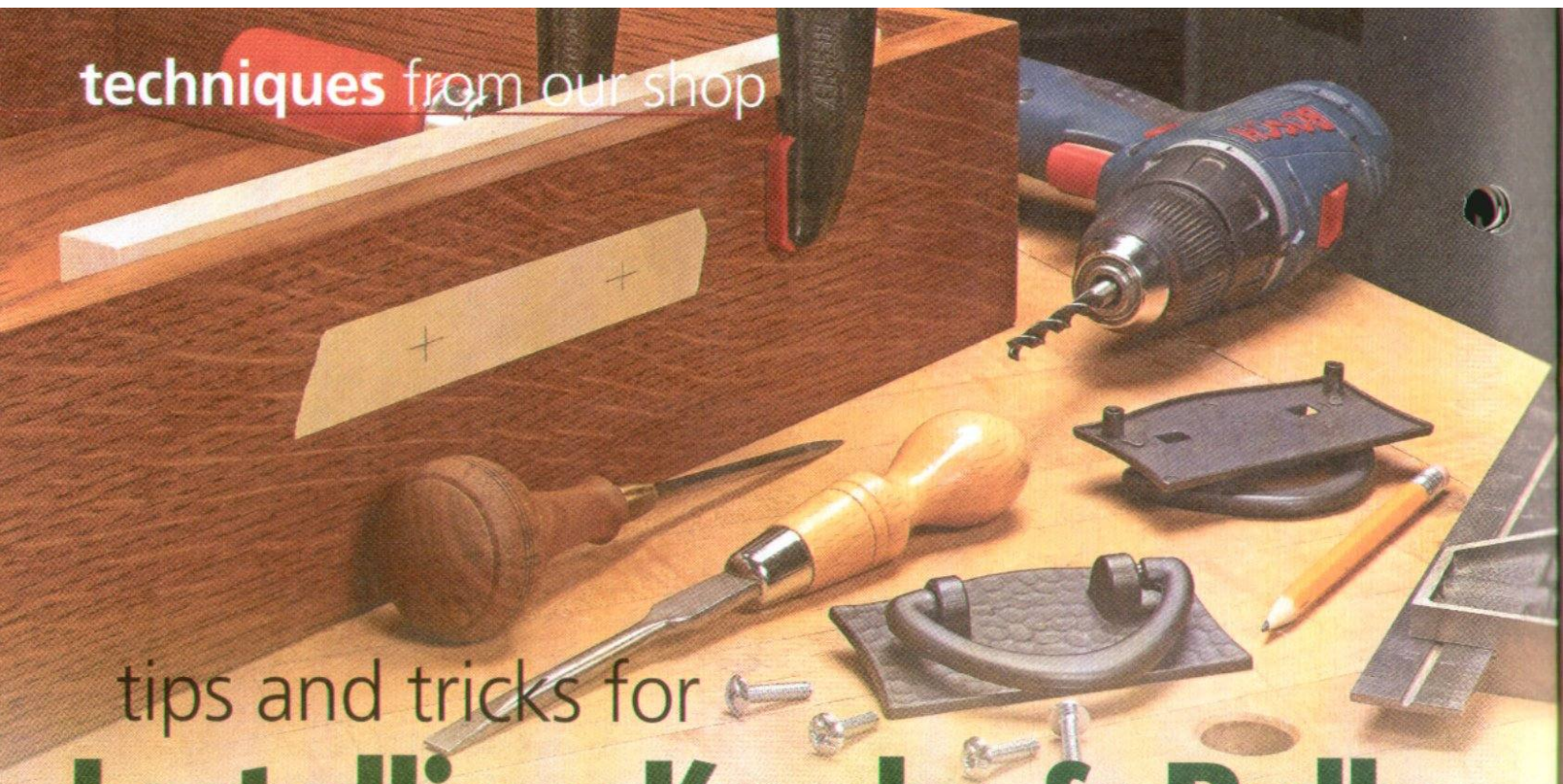

tips and tricks for

Installing Knobs & Pulls

Nothing completes a project like properly positioned and installed hardware. Here's what you need to know to do it right.

Building a project involves a lot of time and effort. And as you near the end, it's all too easy to "slap" the hardware in place just to be done.

But sometimes it's the addition of the hardware that can really make or break the look of a project. To get the best results, it's a good idea to take your time and do things right.

WHERE THEY GO. The first step in this process is deciding exactly where the knobs or pulls should be located.

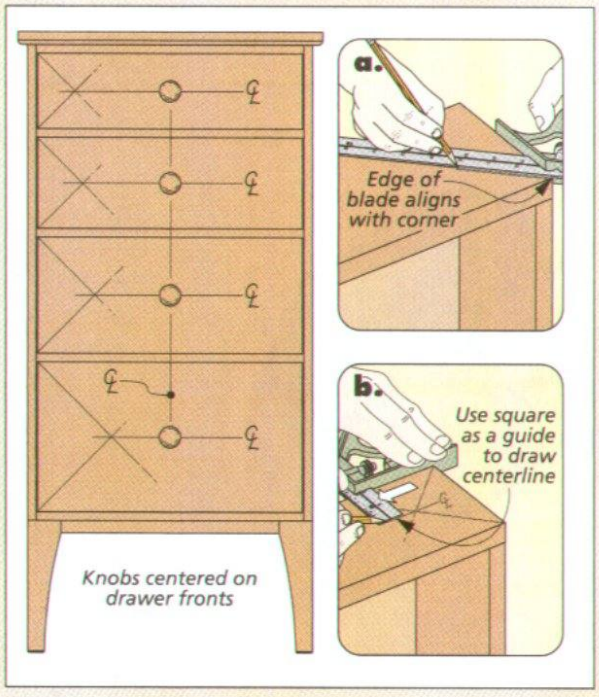

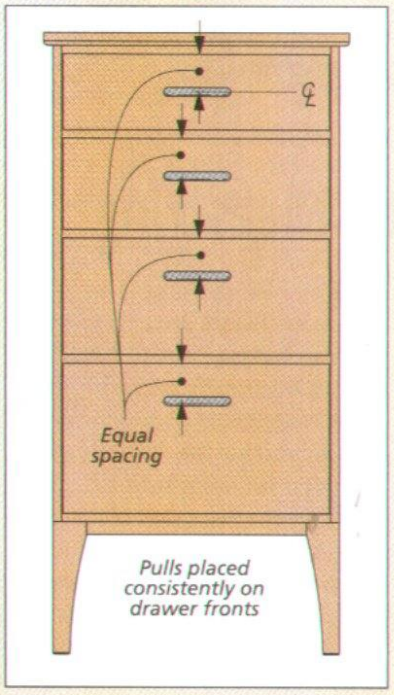

I know — where you put a knob or pull isn't exactly rocket science. But there are a few guidelines I like to follow to help me out.

ADDING KNOBS. For the drawers on most projects, I simply center the knobs on the width and height, as in the far left drawing. Note: The details show you how to quickly and easily find the center.

You can center drawer pulls as well. But there's another option you might want to consider on projects with graduated drawers (drawing at left). Here, the first pull is centered and the remaining pulls are positioned the same distance down from the top edge.

PAIRING HARDWARE. With most things, there's no single, "Here's where you put the hardware" answer. And that's true when you're adding a *pair* of knobs or pulls to the front of a drawer.

For a balanced look, the drawer needs to be wide enough to "handle" two pieces of hardware. Whether I use knobs or pulls, I like to make sure they're at least 3" to 4" in from

the ends. And the spacing between them should be a minimum of three (or four) times that, as in the lower example at right.

This means the drawer will need to be at least 15" to 20" wide before a pair of knobs will look "right." And if you're using pulls, the drawer will need to be a little wider to account for the extra length of the pulls, as illustrated in detail 'a.'

ALWAYS THE EXCEPTION. When a project features drawers of different widths, as in the drawing at right, you can't always follow the rule exactly — but you can get pretty close and still maintain a good balance. As you can see, the knobs on the lower drawers are positioned to line up with the knobs on the *upper* set of drawers.

ASYMMETRICAL PULLS. Another time when it's tough to follow the rules is when you're using a pull that isn't symmetrical. For this kind of pull, it's often better to view the pull as a "whole" and center it on the width of the drawer (detail 'b'). But for pulls that have more substantial backing plates, like the sideboard on page 28, I centered them using the width at the edge of the backing plate, as in detail 'c.'

INSTALLATION TIPS. Once you've determined where the knobs or pulls need to go, you're ready to install the them.

To make it easy to see my layout marks, or change them without leaving a mark on the drawer front, I like to apply a strip of masking tape to the front of the drawer (see photo on opposite page). Then, before I drill any holes, I clamp a scrap of wood to the inside of the drawer to prevent chipout. For a few more installation tips, check out the box below. This way, you'll end up with your hardware securely installed with a look that's just right.

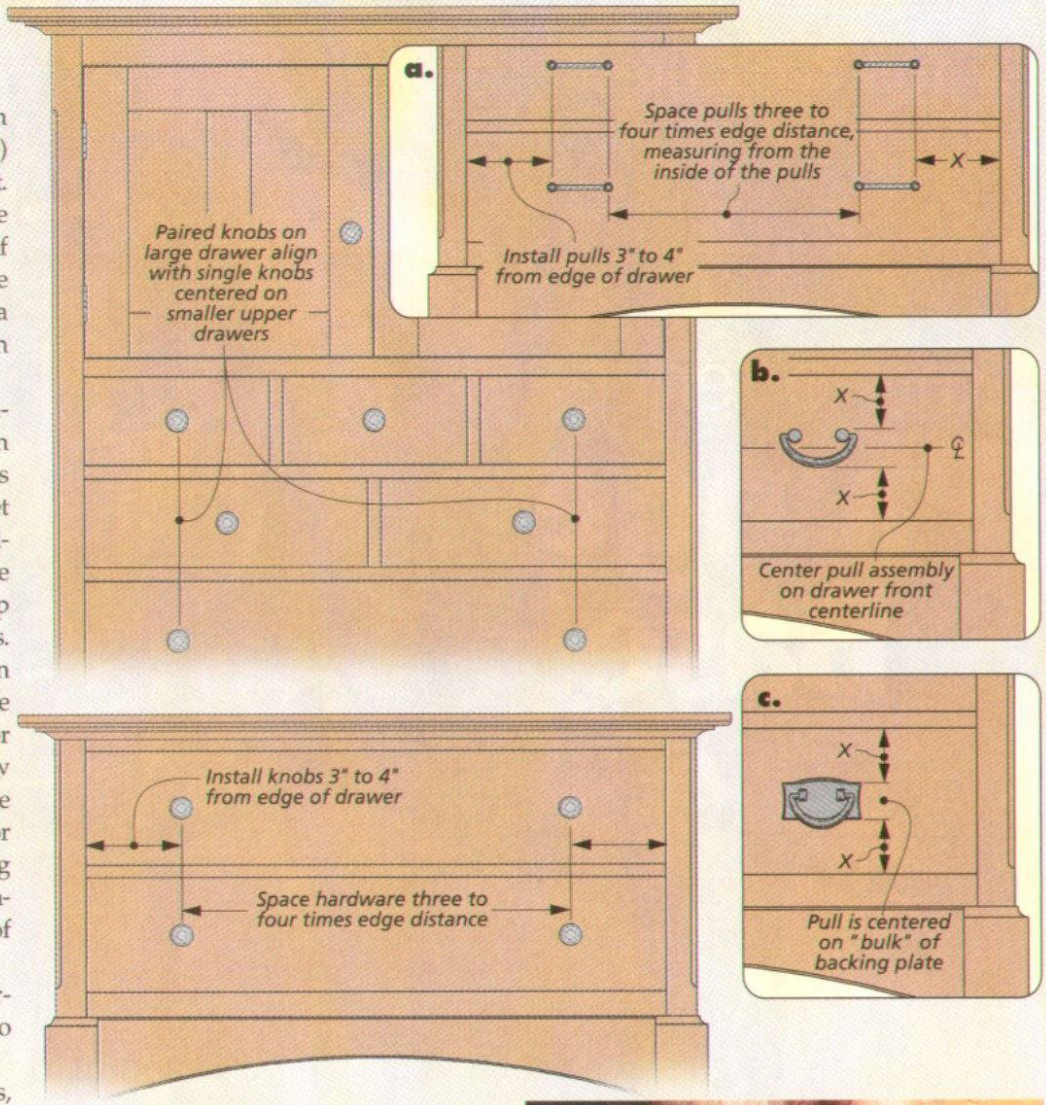

▲ To try out different hardware positions without drilling any holes, use a piece of carpet tape to temporarily attach a knob or pull to a drawer front.

Shop Tips: Making Installation Easy

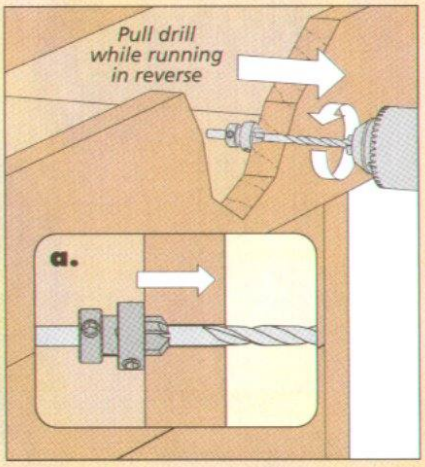

Countersink in Reverse. *Reversing a countersink bit is an easy way to get at the inside of a small drawer.*

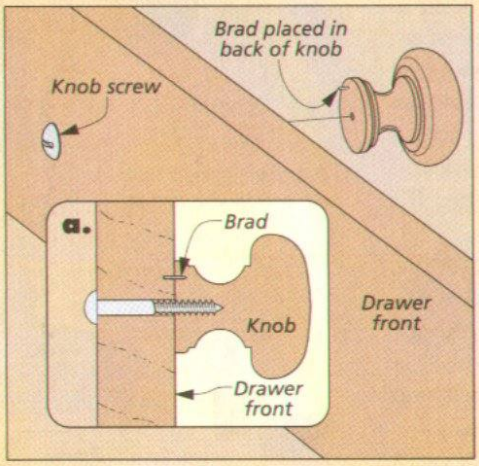

Brad Stabilizer. *To keep a wood knob from spinning, tap a brad into the back, clip off the excess, and then screw the knob in place.*

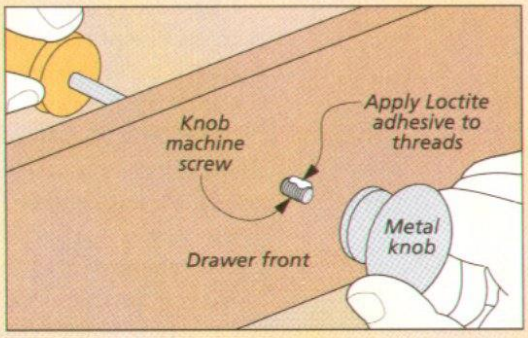

Prevent Spinning. *To secure a metal knob once it's installed, apply thread lock to the screw before threading the knob in place.*

micro fence Plunge Base

Large plunge routers can be bulky and hard to use. Now you can turn your palm router into a plunge router that's precise and easy to handle.

Using a typical plunge router can sometimes be a hit and miss proposition. By that, I mean that you make a trial cut on a piece of scrap, adjust the depth of cut, and repeat until you get it just right. Really fine adjustments are hard to make.

Large routers can be difficult to handle at times. Palm routers are easier to control, but don't have a way to precisely control the cutting depth.

I found a solution that turns a palm router into an impressive and highly accurate plunge router. It's made by *Micro Fence*.

BUILT-IN PRECISION. For several years, *Micro Fence* has been selling a micro-adjustable edge guide for routers. Their fence system features a micrometer-style dial that lets you make very precise adjustments.

Their new plunge base for palm routers uses the same technology for setting the cutter depth. It's the ultimate in precision routing.

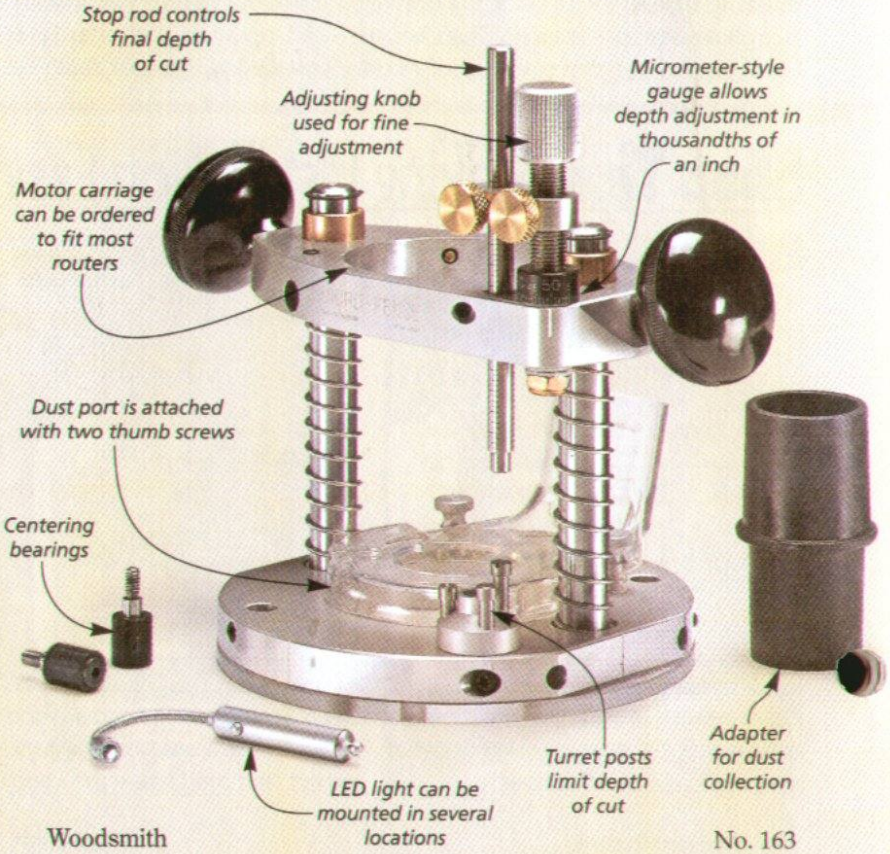

USING THE PLUNGE BASE

As you can see in the three photos below, the "heart" of the system is the micro-adjustment mechanism used to control the depth of cut. I can sneak up on the exact depth without a lot of trial and error. It really takes the guesswork out of depth adjustment.

SETTING THE DEPTH. For example, to route a mortise for a hinge, you set the depth using the actual hinge as a gauge. To do this, "zero out" the adjusting dial following the instructions included with the plunge base. Then, instead of guessing about the depth of cut needed for the hinge mortise or making a bunch of trial cuts, you place the hinge leaf on one the depth stops on the turret, as shown in the left photo below.

Then if you need to, you can "tweak" the depth a thousandth of an inch at a time using the micro-adjusting knob (center photo below).

CENTERED CUTS. The plunge base also comes with two auto-center bearings that you can mount on the bottom of the base plate (see photos at right). To make a cut centered on the edge of a board, place the router on the workpiece and rotate the base until both bearings contact the board.

SOLID PERFORMANCE. I like the overall feel of the router plunge base. Its solid aluminum construction makes it well-balanced and easy to control. And the finely-machined mechanisms move smoothly. It didn't take me long to get the hang of it.

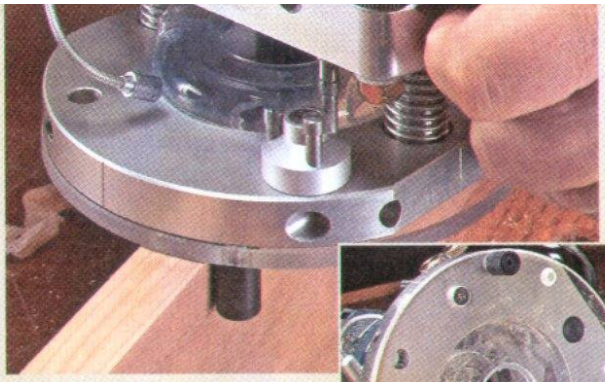

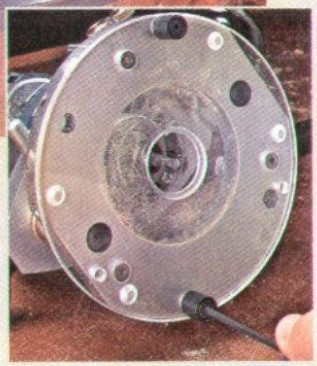

▲ Auto-center bearings are included with the plunge base. They make quick work of mortises for mortise-and-tenon joinery and centered grooves for frame-and-panel construction.

You can order the plunge base directly from Micro Fence (see *Sources* on page 49). The retail price of the plunge base is about $400. But if you do a lot of routing, it's worth adding to your tool box.

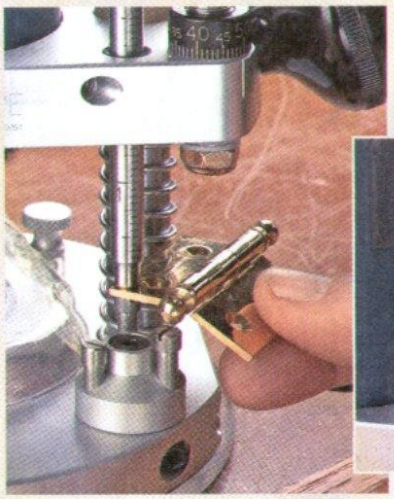

▲ Depth adjustment is precise with the black micrometer dial. For inlay work or hinge mortises, you can set the depth using the material itself. Or you can use a micrometer to measure the thickness then set the depth using the adjustment dial.

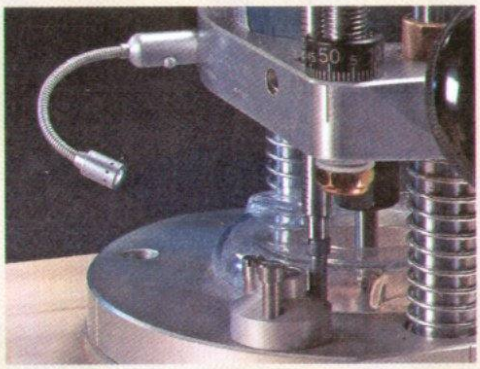

▲ The Micro Fence plunge base comes with a handy LED light. There are four locations on the base where it can be mounted and secured with a set screw.

Low-Cost Choice: Trend T3 Router

If the idea of a palm-sized plunge router appeals to you, the *Trend T3* just might be what you need. It sells for around $80 — and that includes the variable-speed router, plunge base, and edge guide as shown on the right. It also includes two collets (1/4" and 5/16"), a 5/8"-dia. guide bushing, dust port, and wrenches in a plastic storage case.

As you can see in the photo, this router lacks the micrometer-style depth adjustment of the *Micro Fence* plunge base. But you can buy a "fine height adjuster" as an accessory for less than $25. It replaces the depth stop and screws onto a turret screw.

The *T3* router is comparable in power to other palm-sized routers I've used in my shop. And I really like the variable-speed feature.

The smaller size of the router makes it easy to handle for a lot of hand-held router tasks, like small mortises and dadoes. The turret stops let me set the final depth of cut and make light passes.

For all of its features, the *Trend T3* is a great bargain. Check out *Sources* on page 49 for more information.

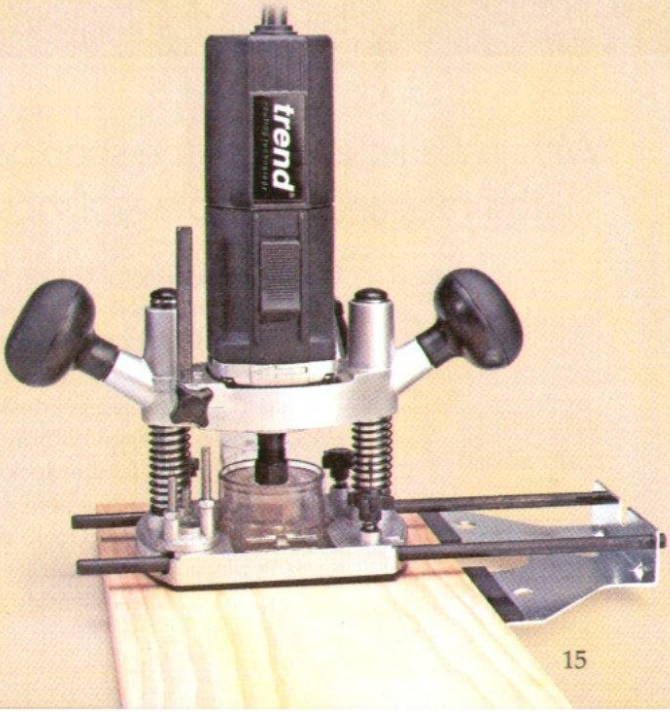

desktop Book Rack

With just a little time in the shop, you can build this rack and add storage almost anywhere.

Desks are magnets for clutter. While papers can be filed away, my books and CDs needed their own place where I could still keep them close at hand. My answer is this book rack you see pictured here.

What makes this a great desk accessory is that it packs a lot of storage without taking up a lot of room on my desk. Its interlocking joinery requires no fasteners. The adjustable divider slides along grooves in the shelf and locks down firmly to hold items in place. And a lot of its parts are identical, so construction and assembly is a snap.

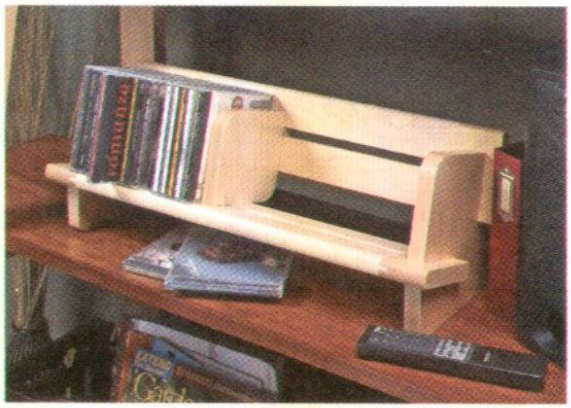

▲ Keeping your books organized isn't the only use for this book rack. Its compact size is just right to hold your CDs and DVDs on an entertainment center or bookshelf next to a television.

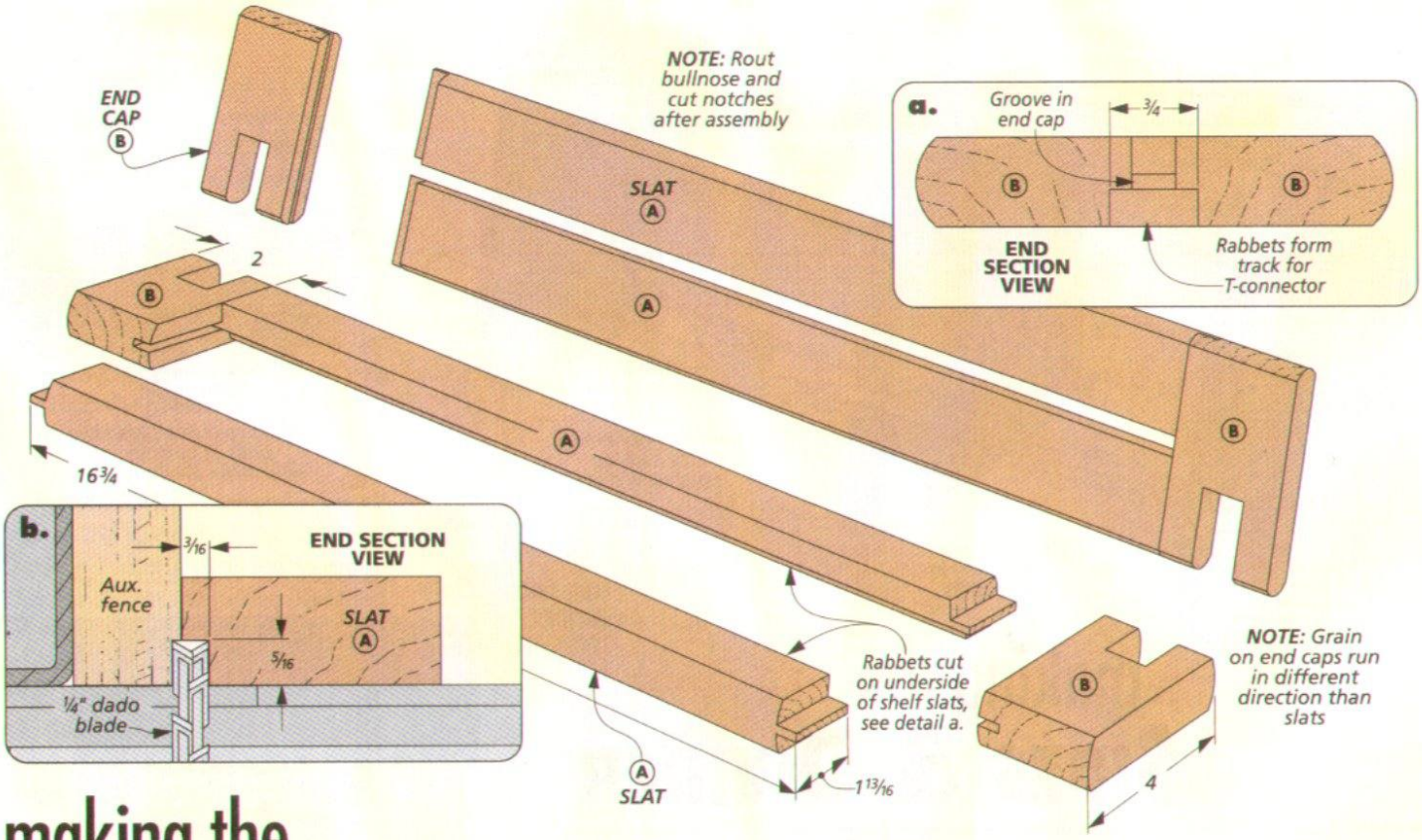

making the SHELF

What makes this rack easy to build is that the shelf and back are identical to each other. Each has two slats that are held together with end caps, as you can see in the main drawing above. So, I started with the end caps.

GROOVES. I like to cut the grooves first, because it's easier to make the tongues fit the grooves than the other way around. The groove is actually just a saw kerf, and it's centered along the end caps. Because the caps are short, I cut the kerf into an extra-long workpiece, then trimmed the end caps to their final size.

RABBETS. With the grooves done, you can turn to the slats. You'll notice that each slat gets a rabbet along one edge (detail 'b'). These will sit side by side when the rack is assembled to serve as the "track" for an adjustable divider that's added later (detail 'a').

TONGUES. Now, it's time to cut the tongues that will fit into the saw kerf you cut on the slats. Cut them a little thick at first, then sneak up on the final thickness to get a tight fit.

ASSEMBLY. Now's a good time to glue up the shelf and back assemblies (detail 'c'). All that's left is to round over the outside edges of the shelf and the back, and cut the notches (see box below).

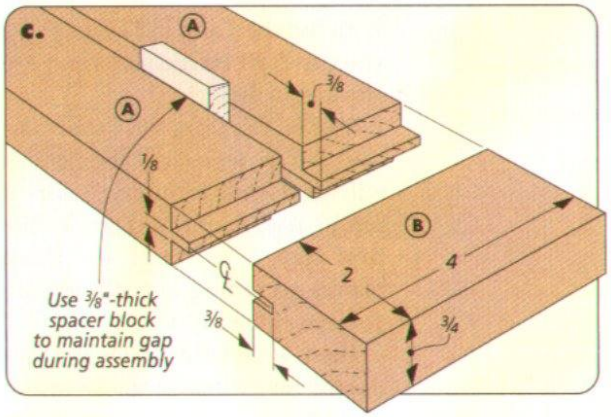

How-To: Bullnose Profile & Notches

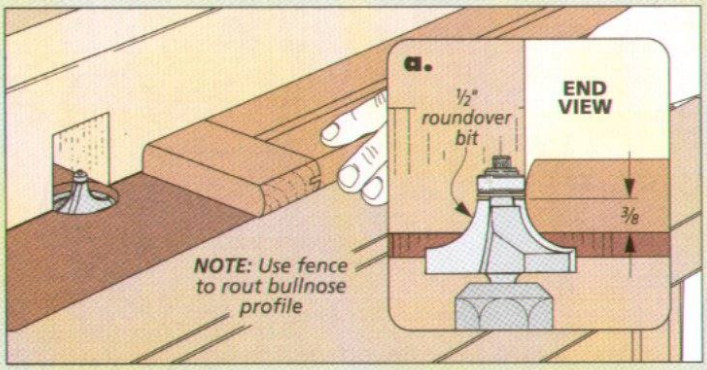

Round Over the Edges. *Soften the sharp outside edges of the shelf and back by routing a bullnose profile with a roundover bit.*

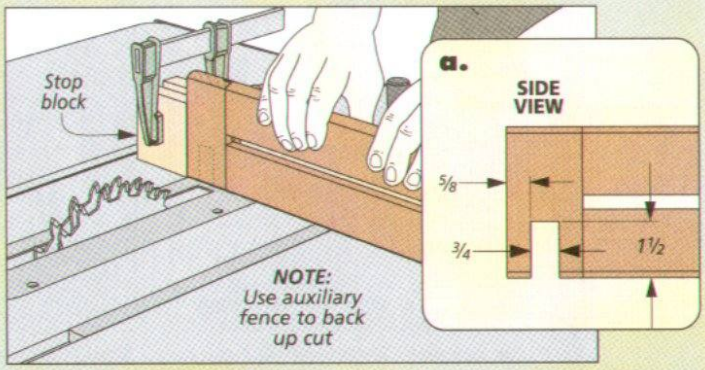

Cut the Notches. *Using a tall auxiliary fence and a dado blade, cut notches in the ends of the shelf and back.*

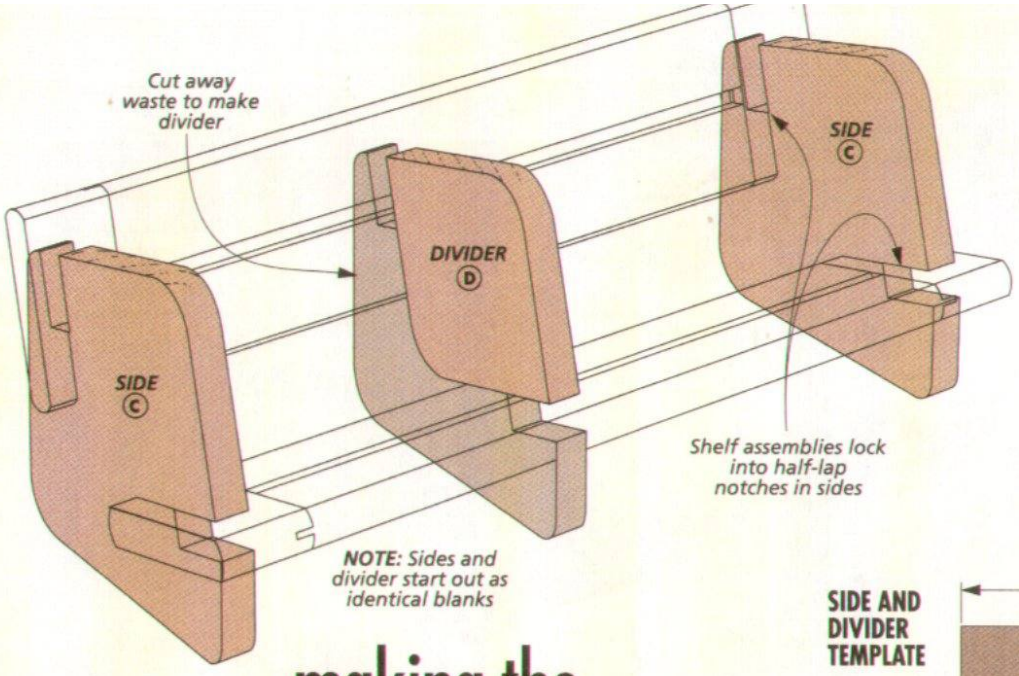

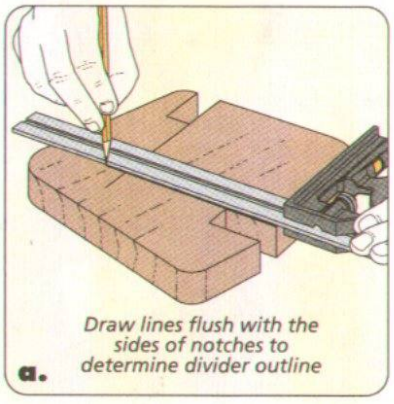

making the SIDES & DIVIDER

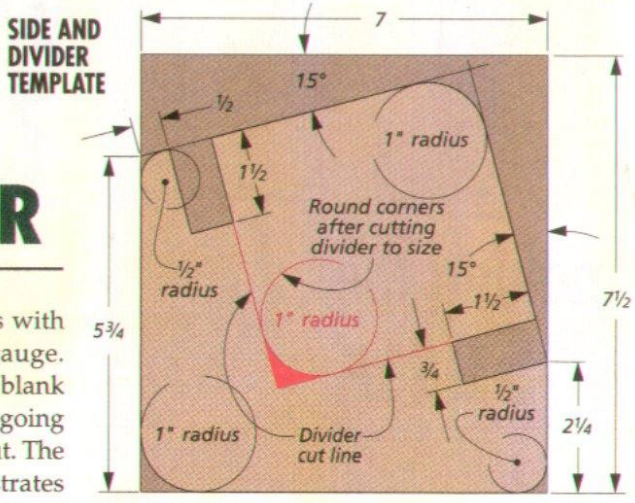

With the shelf and back complete, you can start on the sides and the adjustable divider.

THE SIDES. The sides and the divider start out the same, but the divider will need some trimming before it can be ready for the rack. So, the first step is to rough-cut three blanks according to the template you see at the right.

Then, what I did next was to lay out the final dimensions on one of the blanks. That's the blank to use as you set up to cut each angle, notch, and rounded curve. The trick is to use an auxiliary fence and stop blocks with your miter gauge. Then, run each blank through before going on to the next cut. The box below illustrates how I did this.

ADJUSTABLE DIVIDER. When all the cuts have been made for the sides, select one of the three blanks to make into the adjustable divider. You'll cut this blank down to fit against the shelf and back.

The notches provide the starting point for cutting the divider to size (detail 'a'). Then, you can remove the waste and add a radius to the corner you just made (see inset drawing above).

THREADED INSERTS. The main drawing on the opposite page shows how the hardware and T-connectors go together. The first step is to locate where to install the threaded inserts in the adjustable divider.

How-To: Blank Construction Details

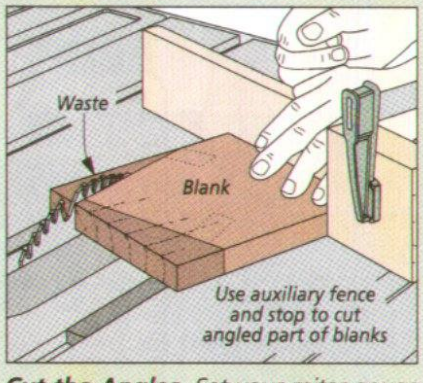

Cut the Angles. *Set your miter gauge to cut a 15° angle and clamp a stop block to make the angled cuts in the blanks.*

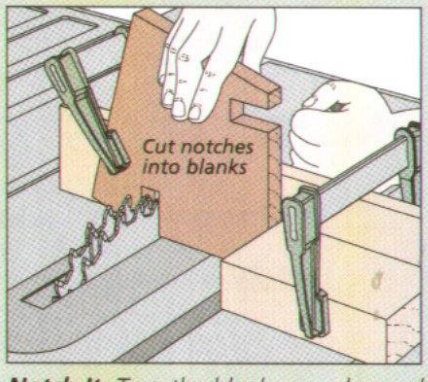

Notch It. *Turn the blanks on edge and cut the notches that will match the notches in the cradle shelf and back.*

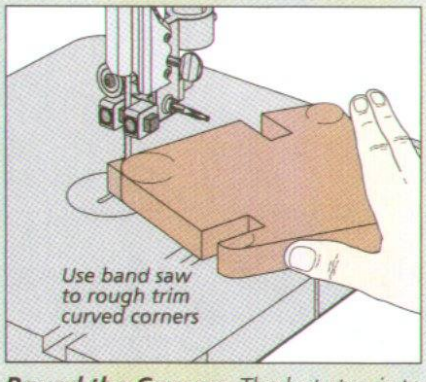

Round the Corners. *The last step is to round the corners of the blanks. A band saw makes this task quick and easy.*

To make this easier, I assembled the sides, the shelf, and the back (main drawing at right). All you have to do is line up the notches and slide the parts together.

Then, I set the divider on the rack and marked layout lines on the back and bottom edges. Next, you can drill the holes for the threaded inserts between those lines and install the inserts (detail 'b').

T-CONNECTORS. T-connectors will guide the divider along the rack. Knurled knobs inserted through the connectors into the threaded inserts will hold it in place.

The connectors are small, so you'll want to make all the cuts in an oversize blank to work safely. Also, trim the connectors a tad short, so they won't butt up against the inserts. The box below shows how to make the T-connectors.

FINAL ASSEMBLY. With the connectors complete, I disassembled the rack to apply the finish. Be sure to let the finish dry completely before putting the rack back together. The notches on the shelf and back slide into the side notches. Set the divider on the cradle, place the connectors in the grooves, and thread the knurled knobs into the inserts to hold the divider (detail 'a').

Now, you can tackle the clutter with your desktop book rack. W

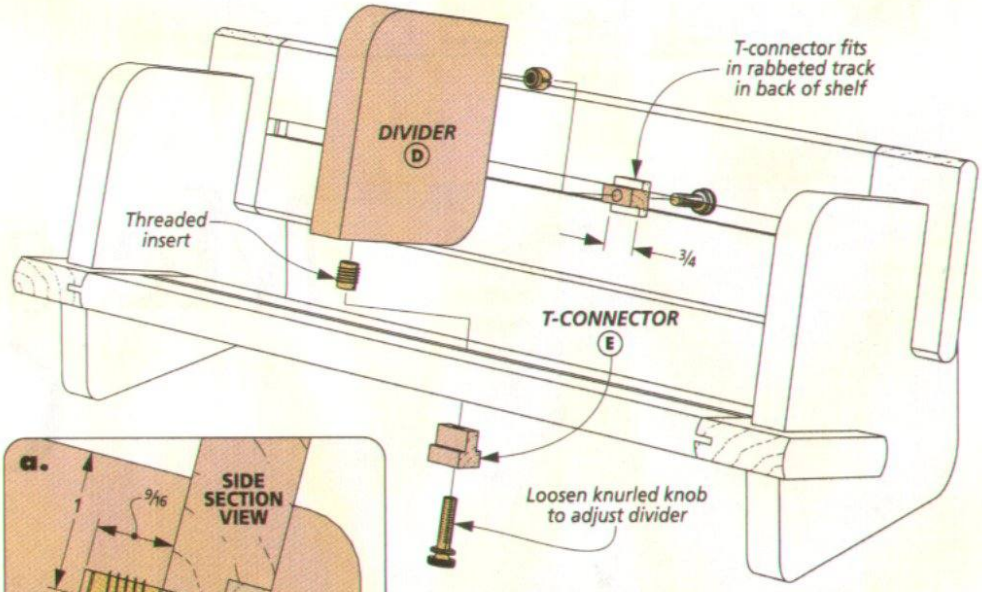

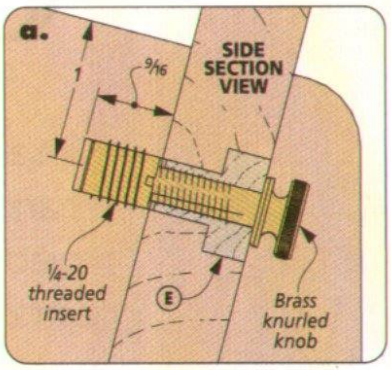

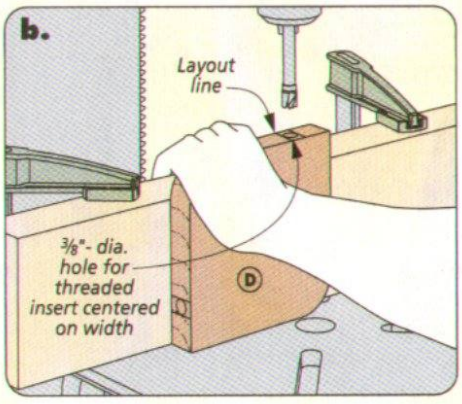

Materials List, Supplies, & Cutting Diagram

A	Slats (4)	3/4 x 1 13/16 - 16 3/4
B	End Caps (4)	3/4 x 4 - 2
C	Sides (2)	3/4 x 7 - 7 1/2 rgh.
D	Divider (1)	3/4 x 7 - 7 1/2 rgh.
E	T-Connectors (2)	3/4 x 3/4 - 23/32

- (2) 1/4 - 20 Brass Threaded Inserts
- (2) 1/4 - 20 x 1" Brass Knurled Knobs

3/4" x 7 1/4" - 72" Maple (3.6 Bd. Ft.)

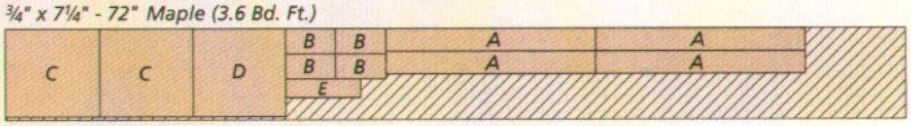

Shop-Built T-Connectors

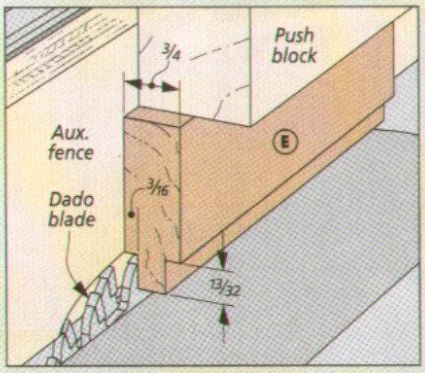

Making the Tongue. *Stand the oversize workpiece on edge to cut the tongues for the T-connector.*

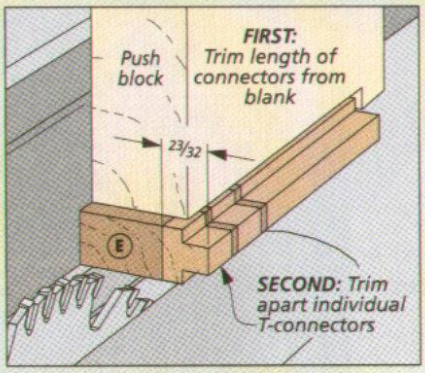

Cut Them Off. *Trimming the connectors a little short will pull the adjustable divider tight against the slats.*

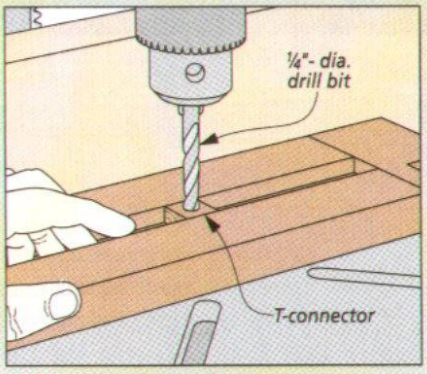

Drilling the Holes. *You can get straighter holes in the connectors by using the assembly to steady them.*

wall-mounted Message Center

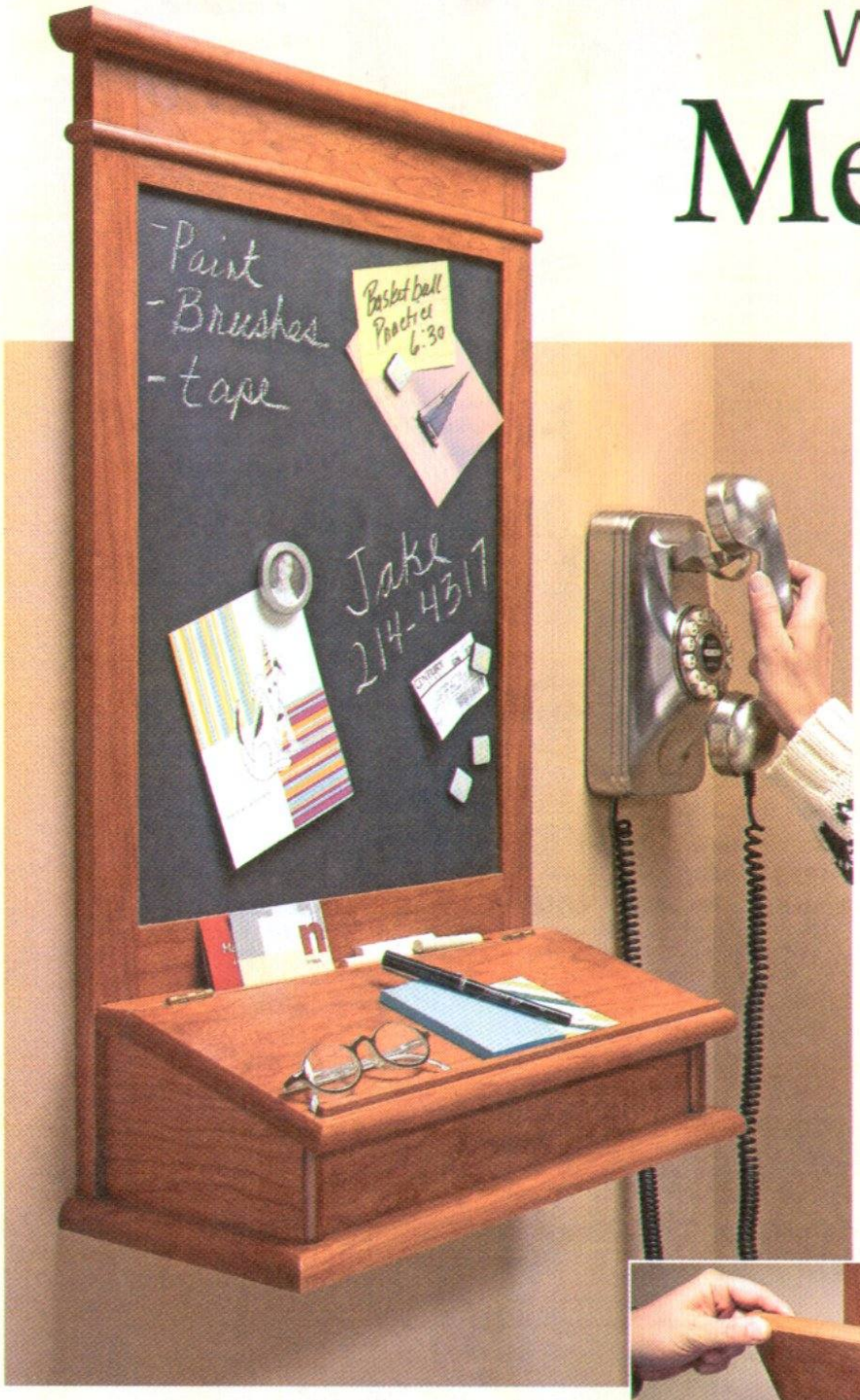

With a magnetic chalkboard and a handy writing surface, this project will become "command central" for all your messages.

Even in today's age of answering machines, voicemail, and text messaging, there are still times when it's just easier to write a message by hand. That's where this message center comes in. It features both a magnetic chalkboard as well as a small, hinged writing surface where you can jot down a quick note on a pad of paper. And if you lift up the lid, you'll find a handy place for storing pencils, pens, letters, or other small items (see photo below).

But perhaps the best thing about this project is how quickly it goes together. There's no tricky or complicated joinery — most of the parts are simply screwed together. So you can complete it over a weekend. And the only tools you need to build it are a table saw, a router, and a drill.

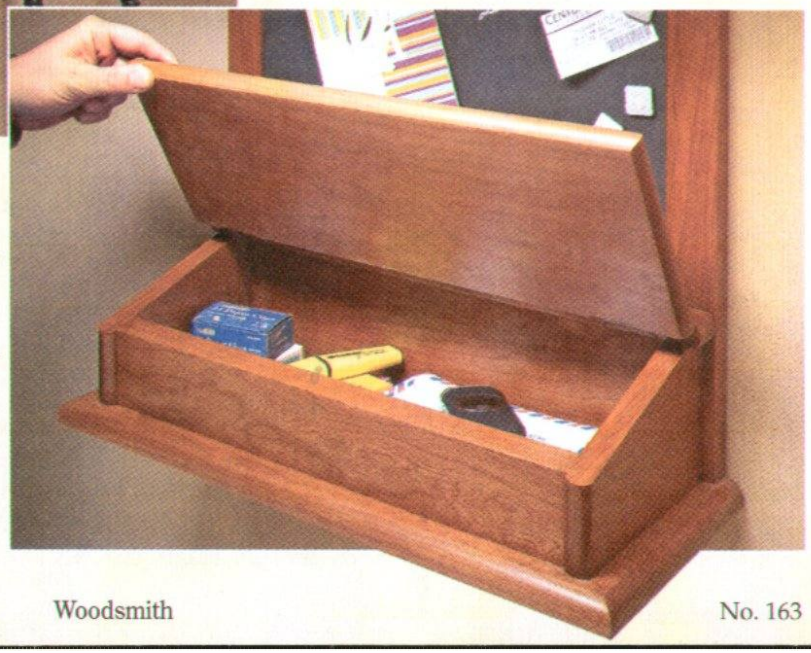

Lift the lid of the message center to reveal a handy storage compartment for pens, pencils, and notepads.

CONSTRUCTION DETAILS

OVERALL DIMENSIONS: 19½"W x 8⅛"D x 29½"H

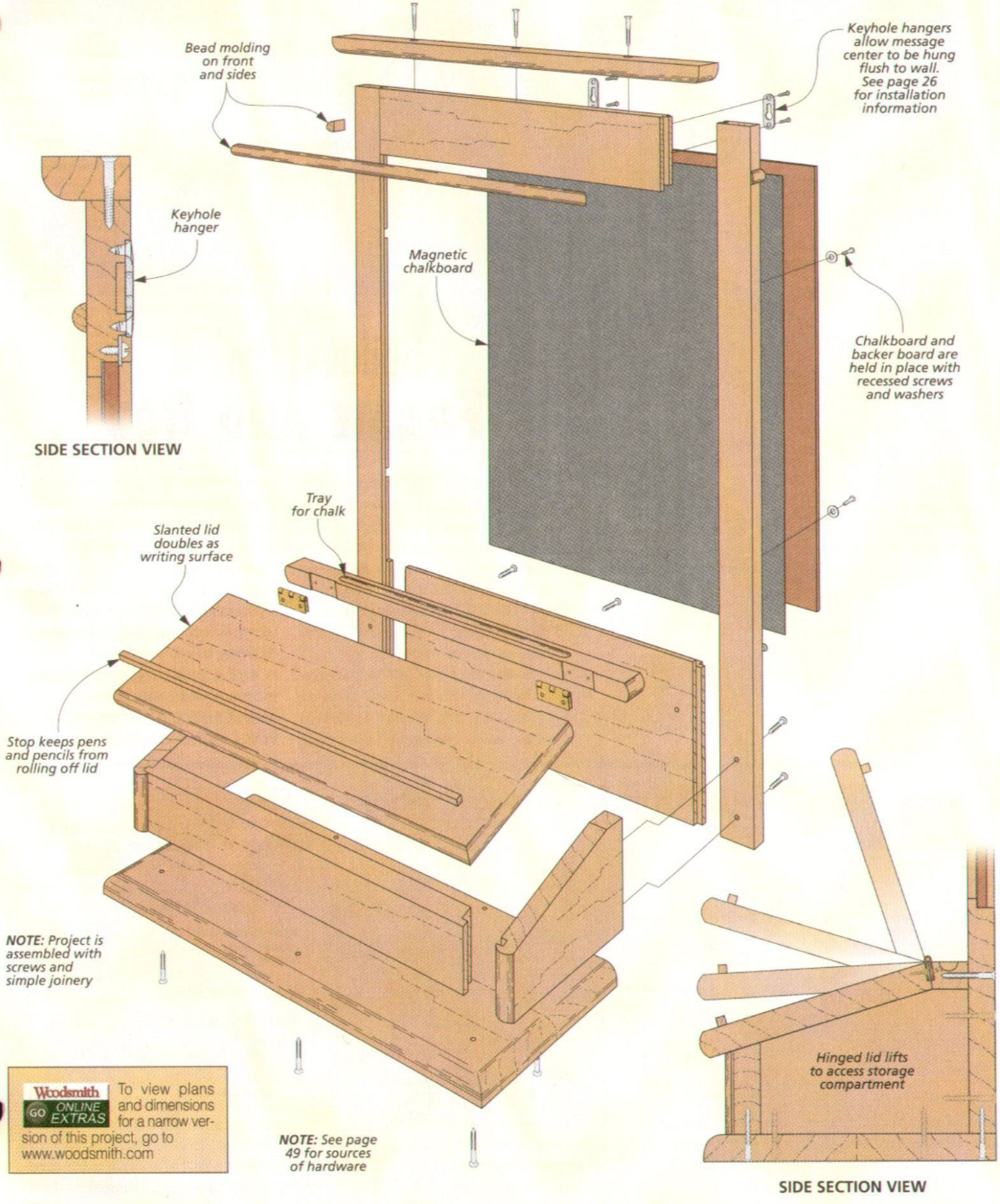

Woodsmith GO ONLINE EXTRAS To view plans and dimensions for a narrow version of this project, go to www.woodsmith.com

NOTE: *See page 49 for sources of hardware*

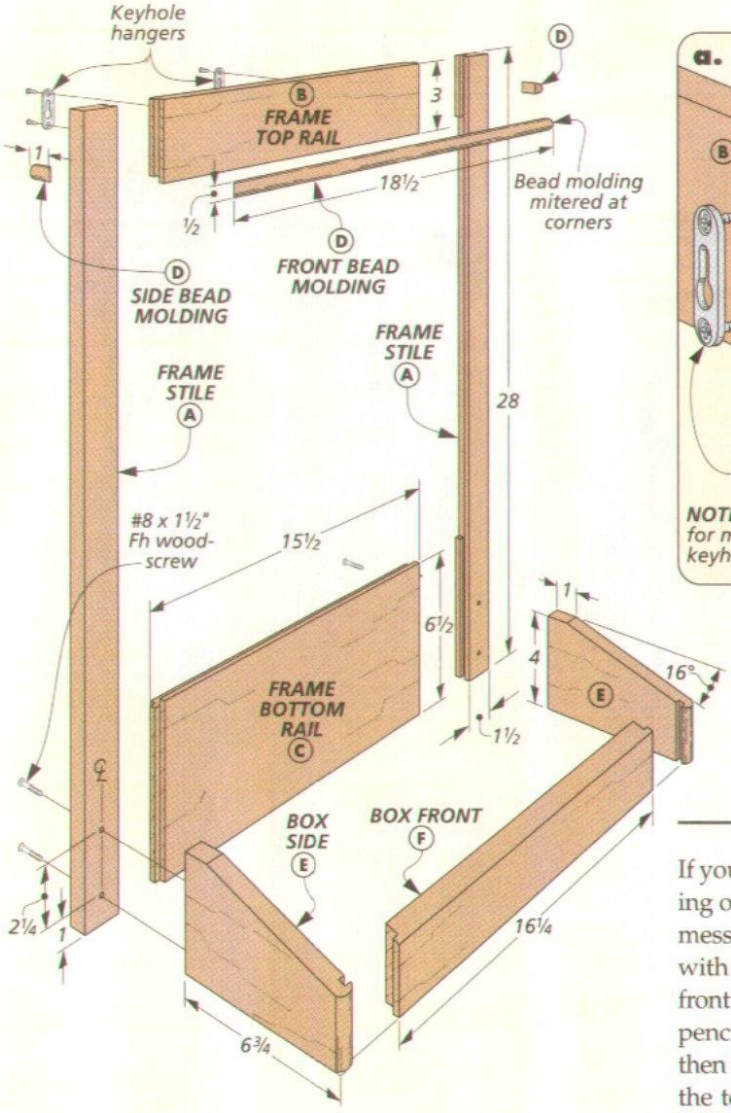

NOTE: *All parts are made from ¾"-thick hardwood. Bead trim is planed to ½"*

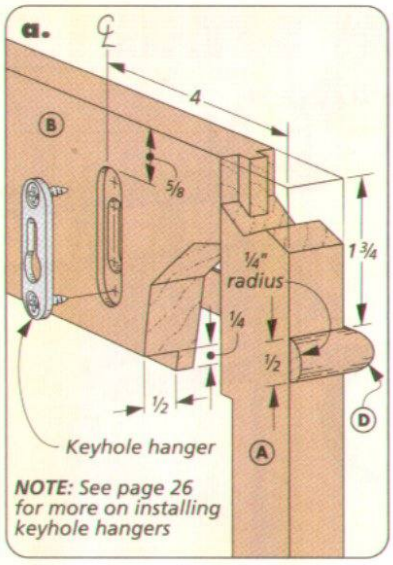

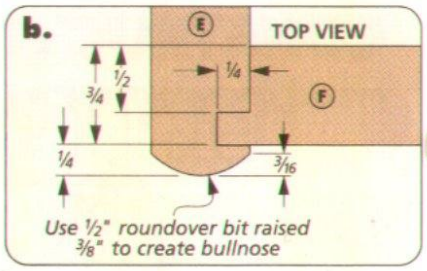

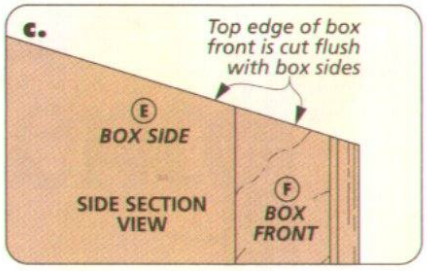

building the FRAME AND BOX

If you take a look at the main drawing on this page, you'll see that this message center is really just a frame with a shallow box attached to the front for storing notepads, pens, and pencils. I made the frame first, and then the box. Later, a cap is added to the top of the frame and a lid and base are added to the box.

FRAME. As you can see in the drawing at left, the frame is made up of a top rail, a bottom rail, two stiles, and some bead molding. The rails and stiles are joined with stub tenon and groove joints — nothing too complicated. (You can see how this is done in the box below.)

After gluing up the frame, I used a router and a rabbeting bit to create an opening in the back of the frame for the chalkboard (see third drawing in box below).

At this point, I also made some mortises and counterbores in the back of the frame for the hardware. First, I made a couple of "stepped"

How-To: Groove, Stub Tenons, & Rabbet

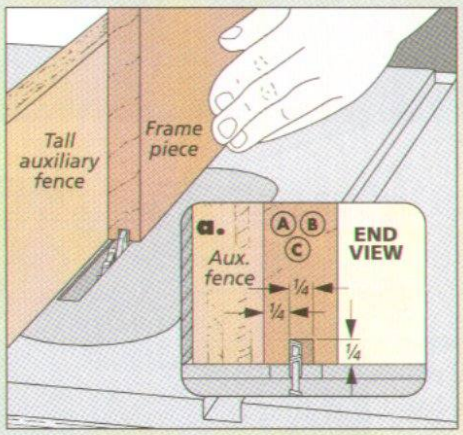

Cut the Grooves. *Cut a groove on the edge of each frame piece, flipping the workpiece between passes to center the groove.*

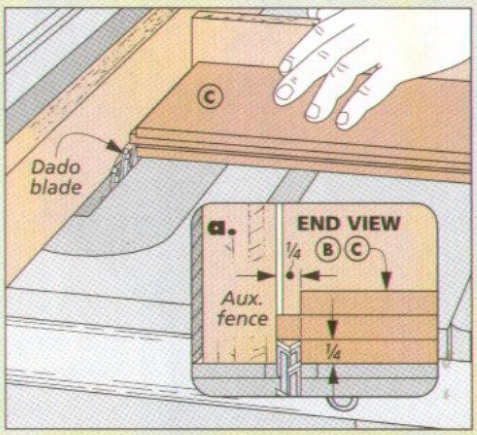

Make the Stub Tenons. *Using a dado blade, cut stub tenons on the ends of the frame rails to match the grooves in the stiles.*

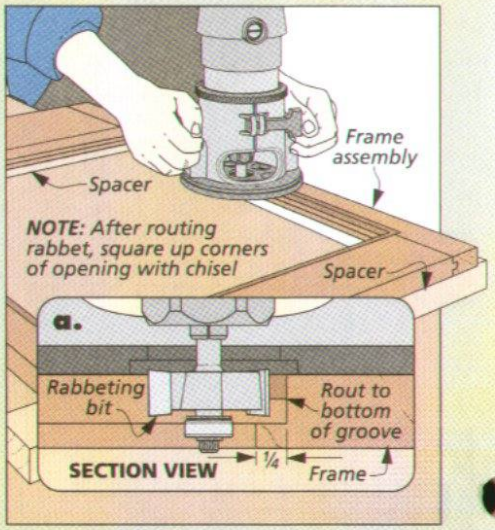

Rout Rabbet. *To create an opening for the chalkboard, rout a rabbet all around the inside of the back of the frame.*

mortises for a pair of keyhole hangers that are used to hang the message center, as you see in detail 'a' on the opposite page. (For more on this, see page 26.)

Next, I drilled counterbores for some screws and washers that will be used to hold the chalkboard in place. Take a look at the main drawing and details 'a' and 'b' on this page for the dimensions and locations of these counterbores.

BEAD TRIM. Before moving on to making the box, I added some bead molding to the frame as you see in the drawing on the opposite page. To make this molding, simply use a router table to round over the edges of a board. Then rip the molding to width on the table saw. The trim is just mitered and glued in place around the top of the frame.

ADDING THE BOX. With the frame complete, the next step is to add the box. Since the frame forms the back of the box, all you need to do is add a front and a pair of sides.

The only thing that's tricky about this is the fact that the box sides are angled to create a slanted writing surface. The top edge of the box front is also beveled to match this angle. You can get a better idea of what I'm talking about by taking a look at detail 'c' on the opposite page.

The sides are joined to the front with a simple tongue and dado joint (detail 'b' on opposite page). And the front edges of the box sides are routed to create a bullnose profile. (See the box on page 25 for more on how I did this.) Once this is done, you can glue up the box front and sides and screw the box to the frame.

CHALKBOARD. The next step is to add the chalkboard. This is nothing more than a sheet of galvanized steel backed up by a piece of 1/4" hardboard. This allows you to not only write on the chalkboard but use magnets to post messages as well. To create the "chalkboard" surface, I used a special chalkboard paint, as you can see in the box at right.

After the paint is dry, you can add the chalkboard to the frame and secure it in place with some washers and small woodscrews.

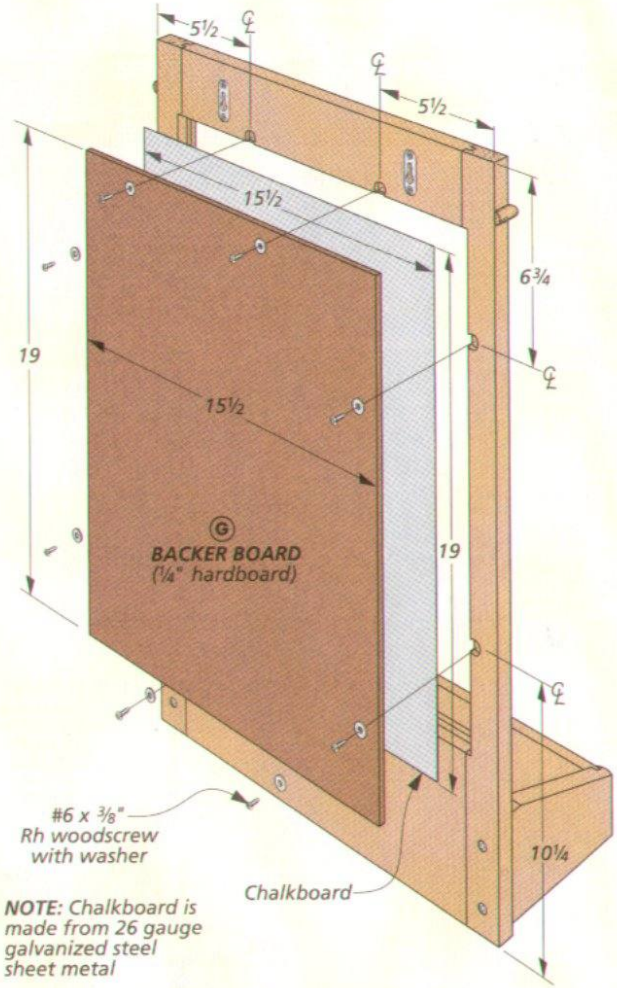

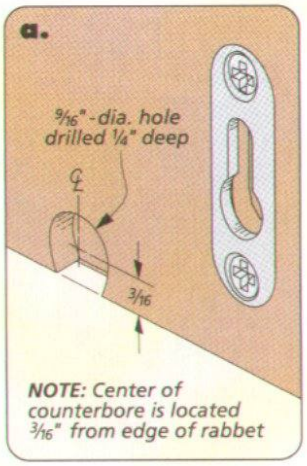

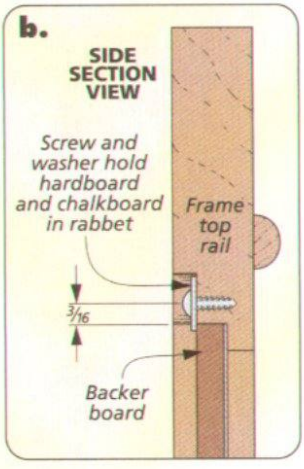

How-To: Magnetic Chalkboard

To make the chalkboard for the message center, I started by cutting a sheet of 26 ga. galvanized steel to size using a jig saw and a metal-cutting blade. Then using spray adhesive, I glued the steel to a piece of hardboard.

Before you can apply the chalkboard paint, you'll have to prep the metal. Start by wiping it down with mineral spirits to remove any grease or oil. Then apply a couple of coats of primer. Finally, to create a durable writing surface, I applied three coats of chalkboard paint (see page 49 for sources).

▲ Wipe the surface of the steel down with mineral spirits to remove any residual grease or oil that may be on the steel.

▲ Roll on a couple coats of primer. Roll the first coat in one direction and then roll the second coat in a crosswise direction.

▲ Once the primer has dried, you can roll on the chalkboard paint. I applied three coats to create a long-lasting writing surface.

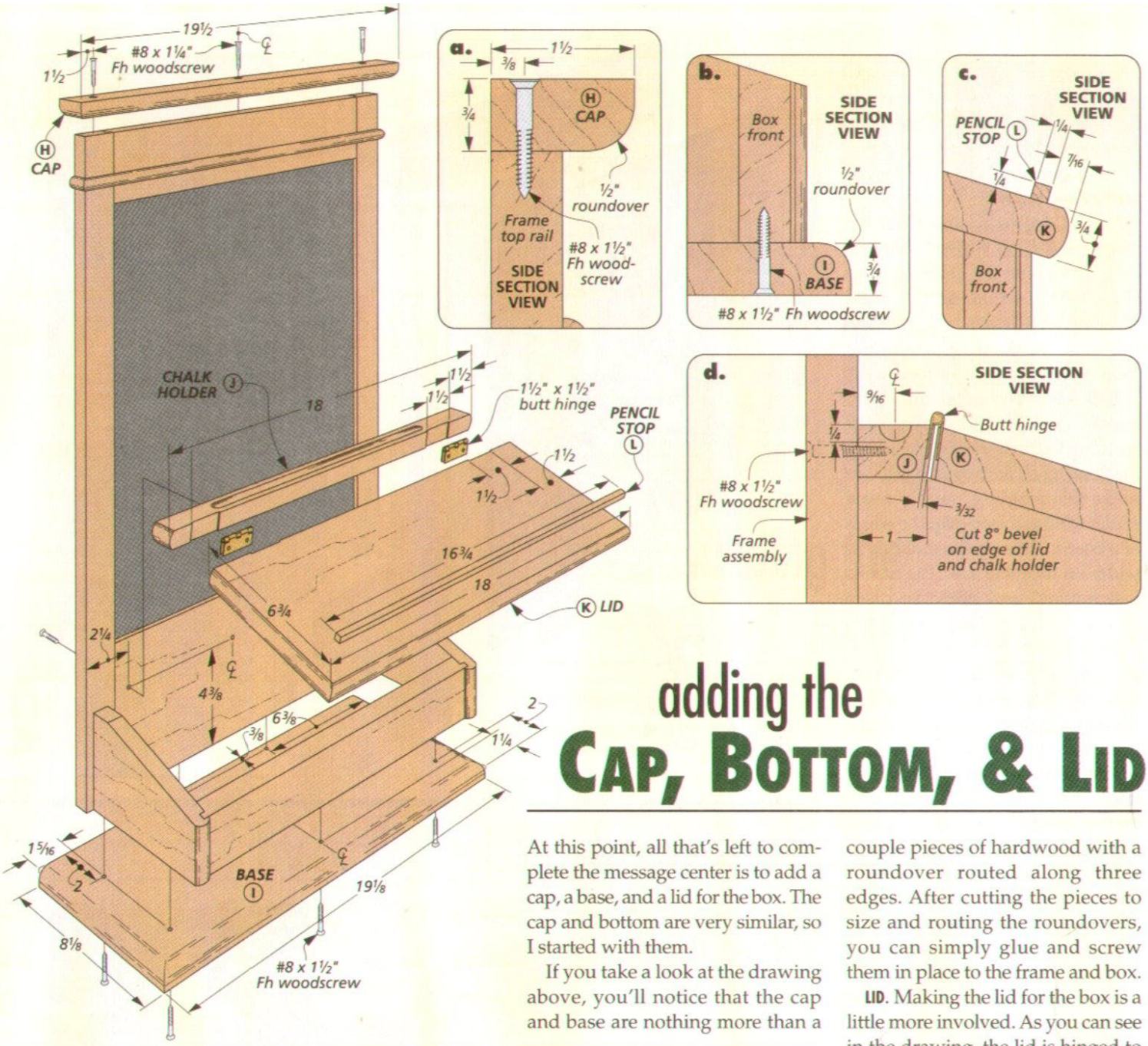

adding the CAP, BOTTOM, & LID

At this point, all that's left to complete the message center is to add a cap, a base, and a lid for the box. The cap and bottom are very similar, so I started with them.

If you take a look at the drawing above, you'll notice that the cap and base are nothing more than a couple pieces of hardwood with a roundover routed along three edges. After cutting the pieces to size and routing the roundovers, you can simply glue and screw them in place to the frame and box.

LID. Making the lid for the box is a little more involved. As you can see in the drawing, the lid is hinged to a narrow, fixed piece so that you can access items inside the box. And a well routed in this piece holds chalk.

There's not much to the lid. It starts as a piece of ¾"-thick stock that's cut to size. The edge of the lid that receives the hinges is beveled at 8° to match the angle on the sides of the box. The other three edges get the same bullnose profile that you used on the box sides, as shown in the box on the opposite page.

CHALK HOLDER. The narrow chalk holder starts off as an extra-wide blank. This made it a bit safer to rout the bullnose profile and create the well for the chalk.

I routed the profile on the ends of the blank first. Then I beveled the

Materials List, Supplies, & Cutting Diagram

A Frame Stiles (2)	¾ x 1½ - 28	**J** Chalk Holder (1)	¾ x 1⅛ - 18
B Frame Top Rail (1)	¾ x 3 - 15½	**K** Lid (1)	¾ x 6¾ - 18
C Frame Bottom Rail (1)	¾ x 6½ - 15½	**L** Pencil Stop (1)	¼ x ¼ - 16¾
D Bead Molding (1)	½ x ¼ - 22 rgh.	• (17) #8 x 1½" Fh Woodscrews	
E Box Sides (2)	¾ x 4 - 6¾	• (2) # 8 Keyhole Hangers w/Screws	
F Box Front (1)	¾ x 3 rgh. - 16¼	• (8) #10 Washers	
G Backer Board (1)	¼" hdbd. - 19 x 15½	• (8) #6 x ½" Rh Woodscrews	
H Cap (1)	¾ x 1½ - 19½	• (2) 1½" x 1½" Brass Butt Hinges w/Screws	
I Base (1)	¾ x 8⅛ - 19⅛	• (1) 15½" x 19"-26 ga. sheet metal	

¾" x 7" - 72" Cherry (3.5 Bd. Ft.)

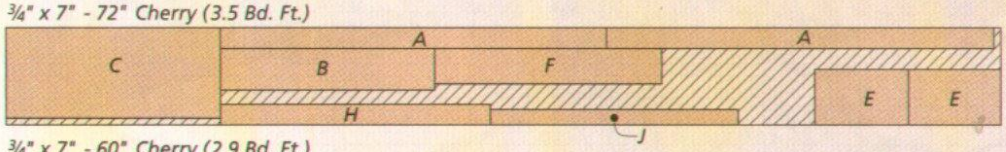

¾" x 7" - 60" Cherry (2.9 Bd. Ft.)

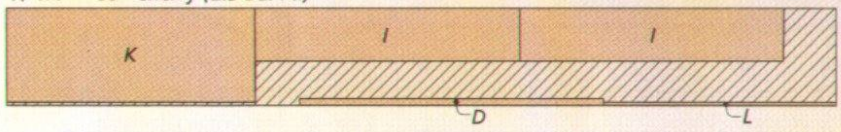

ALSO NEEDED: One - 24" x 24" sheet of ¼" hardboard

edge of the blank to match the bevel on the lid. After using a core box bit to rout the well for the chalk, I cut the chalk holder free from the blank.

The mortises for the hinges can be cut on the table saw. Once this is done, you can install the hinges on both the lid and the chalk holder and attach them to the rest of the message center (detail 'd').

PENCIL STOP. The last piece to add to the message center is a pencil stop. This is just a small strip of wood that gets glued to the top of the lid. It prevents pencils from rolling off the lid of the box. You can get the dimensions for this piece by taking a look at the main drawing and detail 'c' on the opposite page.

FINISH. After wiping some cherry stain on all the wood parts, I applied a finish to the message center. For more on the "hybrid" finish I used, see the article on page 46.

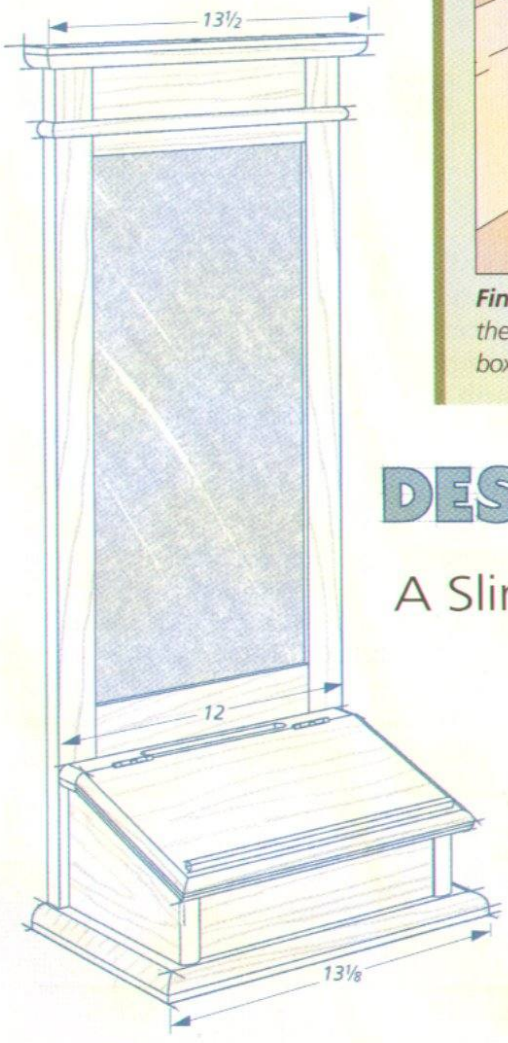

How-To: Make the Lid and Chalk Holder

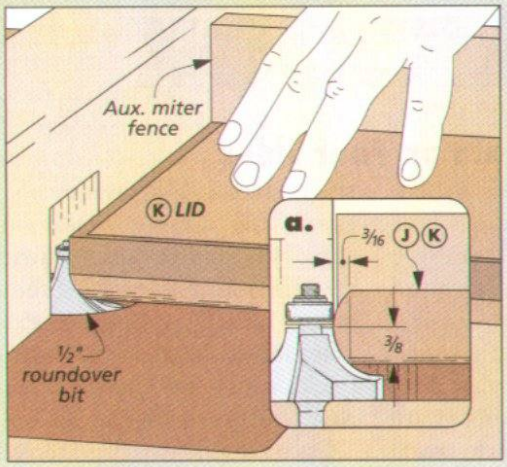

Bullnose Profile. *The bullnose profile is made using a ½" roundover bit that is raised ⅜". The router table fence acts as a bearing surface.*

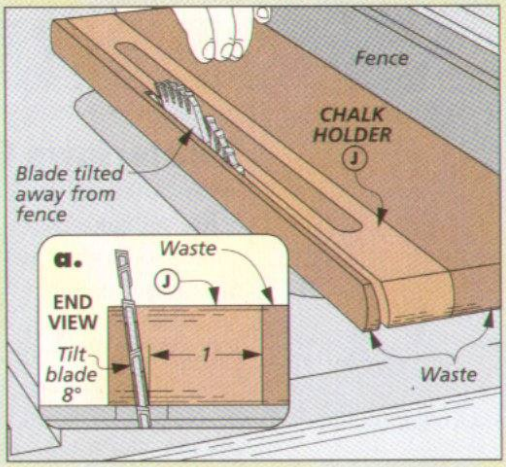

Rip Beveled Edge. *To make the chalk holder, start with an extra-wide blank. After routing a bullnose on the ends, cut a bevel along the edge.*

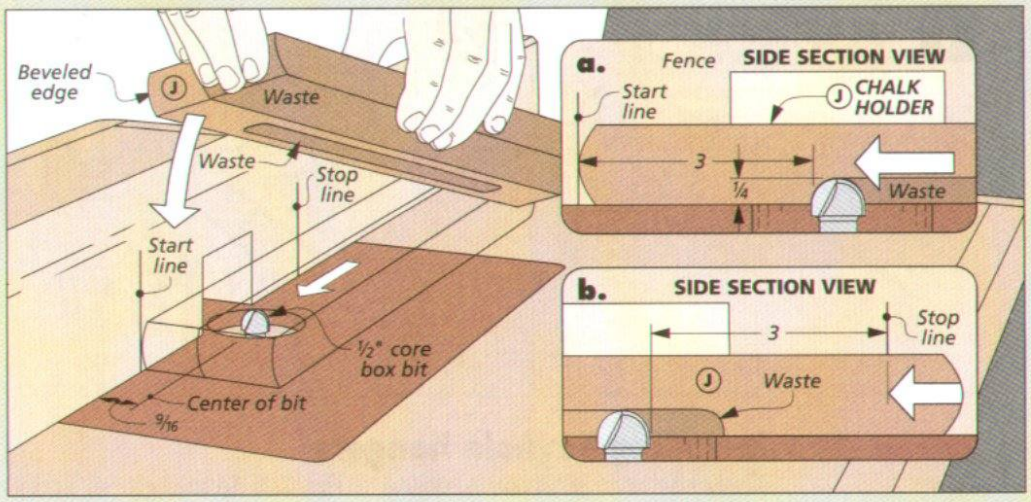

Finish the Chalk Holder. *To create the well for the chalk, lower the blank down onto a core box bit and push the workpiece forward. You can draw start and stop lines on your router table fence to establish the ends of the well. Finally, rip the chalk holder from the blank.*

DESIGNER'S NOTEBOOK

A Slimmed-Down Version

Woodsmith GO ONLINE EXTRAS To view plans and dimensions for a narrow version of this project, go to www.woodsmith.com

If wall space is at a premium in your home, you might want to consider building this "slimline" version. It's the same height as the full-size center, but it's 6" narrower overall. So you get all the benefits of the full-size version of the message center in less space. Aside from this difference, the joinery and everything else about the project is the same.

SHOP NOTEBOOK

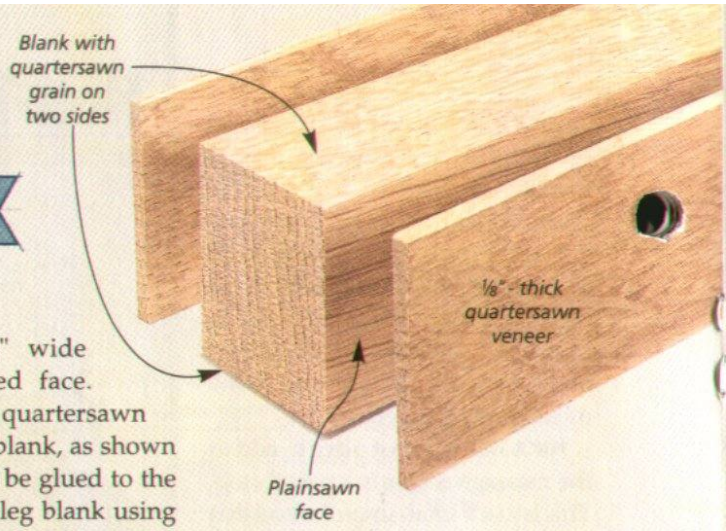

▲ A blank with quartersawn grain on two sides (top and bottom) is sandwiched with thin veneers to create a leg with four quartersawn sides.

Quartersawn Grain on Four Sides

When building the Craftsman sideboard on page 28, I used a simple lamination technique to create legs that show quartersawn grain on all four sides. Each leg starts out as a 1½" x 1¾" blank with quartersawn grain on the two narrow sides. Then ⅛"-thick quartersawn veneers are glued to the "plain" sides to create a square blank (see the photo above).

To make the veneers, you'll need a piece (or two) of quartersawn stock about 1⅞" wide across the figured face. After ripping the quartersawn veneers from the blank, as shown in Fig. 1, they can be glued to the plain faces of the leg blank using thick cauls to distribute the clamping pressure (Fig. 2).

Once the glue was dry, I took the legs to the router table and quickly trimmed the facings flush to the leg blank (Fig. 3).

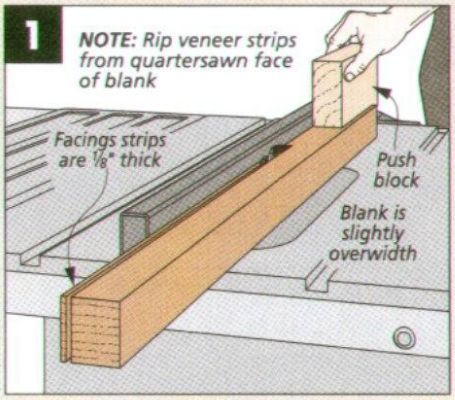

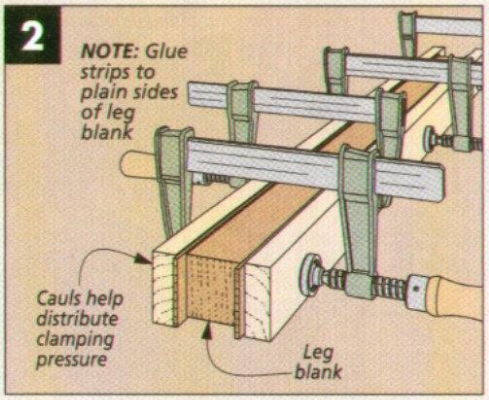

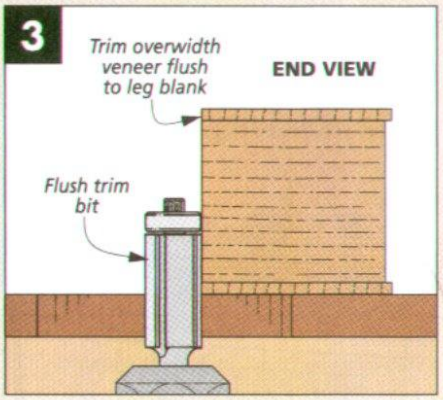

Installing Keyhole Hangers

The keyhole hangers installed on the back of the message center on page 20 provide an easy way to mount the project on a wall. A quick look at the drawing at right shows how the hanger simply "locks" over a screw mounted in the wall.

To do their job, the hangers are mortised flush to the surface. A second mortise behind the hanger provides relief for the screw head (Fig. 2a). To make this "stepped" mortise, start by using a hanger to lay out the primary mortise. Then drill out the waste with a Forstner bit and clean up the sides with a chisel (Figs. 1 and 1a).

To complete the job, switch to a smaller diameter bit and drill out the deeper secondary mortise (Figs. 2 and 2a). Clean up this mortise and then screw the hanger in place.

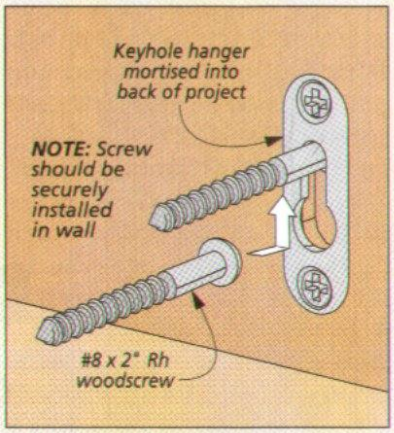

Captured. The round hole allows the hanger to pass over the screw head. When the shank enters the slot, the two are locked together.

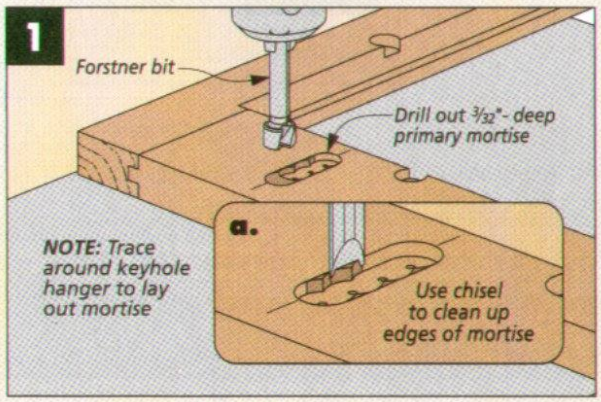

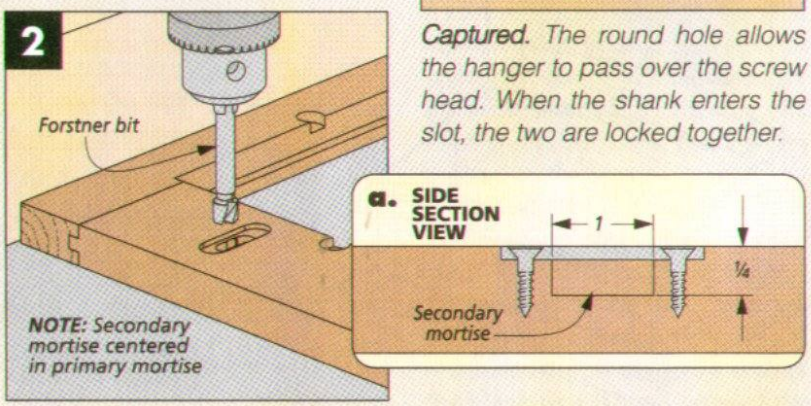

Tenoning Jig

The simple tenoning jig shown in the photo at right is the key to the twin tenon technique discussed on page 38. It offers the stability and control you need to make accurate cuts and end up with a tight-fitting joint. And as you can see in the drawings below, it's easy to build.

SADDLE. The tall plywood saddle of the jig should fit snugly over the rip fence of the saw, but still slide easily. My jig is sized to fit the rip fence of my contractor's saw but you'll want to make your jig to fit your particular saw. The best way to fit the jig to the fence is to first cut the two face pieces and then cut grooves for the spacers. The spacers can then be sized for a perfect fit.

THE STOP. The sturdy hardwood stop dadoed into the back of the jig gives you easy and solid control of the workpiece. But in order for the cuts to be accurate, it needs to be installed correctly. Just make sure the stop is square to the bottom edge of the saddle and also square to the face piece.

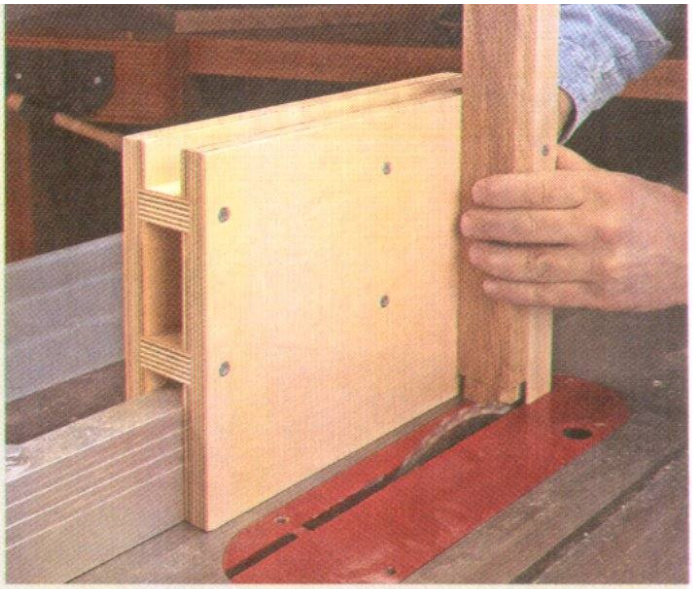

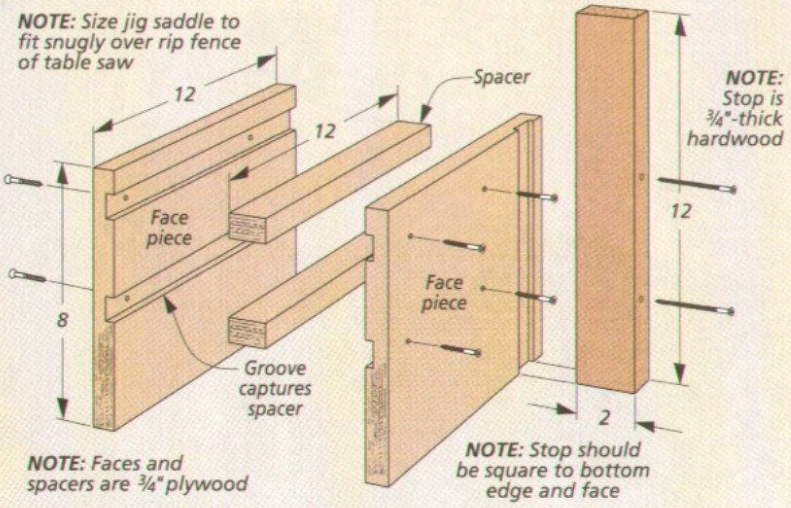

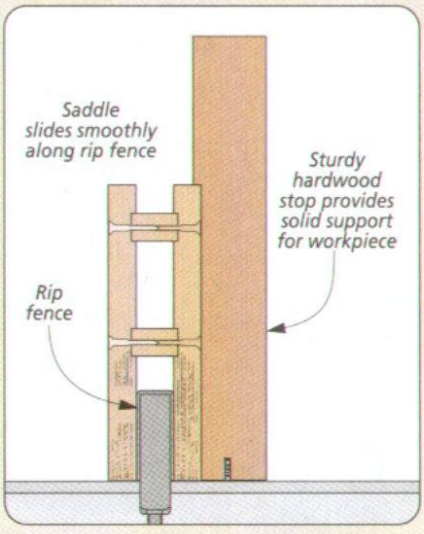

Cutting an Angled Notch

The two upper drawers of the Craftsman sideboard on page 28 are supported by a plywood dust panel below. For this reason, I wanted to make sure the dust panel was solidly fixed into the frame.

The front edge of the panel is attached to the front middle rail with a tongue and groove. At the back of the frame, I cut angled notches in the legs that firmly capture the beveled corners of the dust panel, as shown in the photo at right. These simple angled notches won't weaken the legs and can be accurately cut using a straightforward table saw technique.

V-BLOCK. The first step in the process is to make the simple V-notched carriage block shown in Fig. 1. This block, clamped to the miter gauge, will hold the leg at a 45° angle to the saw table as you cut the notch with a dado blade.

THE CUT. The first goal is to size the notches in the legs to fit the plywood panel. A test cut or two will help you set the dado blade to the right width. Next, to position the notches at the right spot along the legs, I used the rip fence as a stop, as shown in Fig. 2.

Just sneak up on the depth of the cut until the notch extends from groove to groove (right photo). W

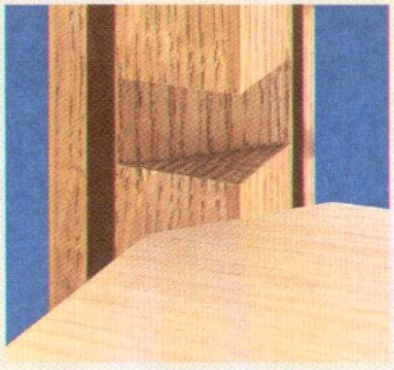

◄ Angled notches in the rear legs of the sideboard provide solid support for the plywood dust panel and the drawers above.

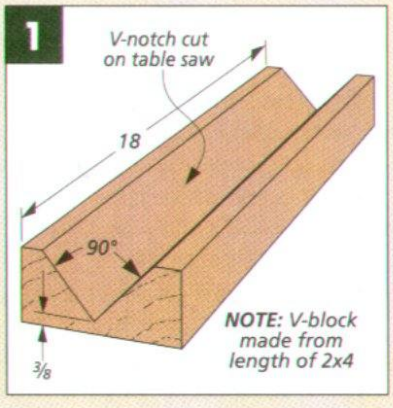

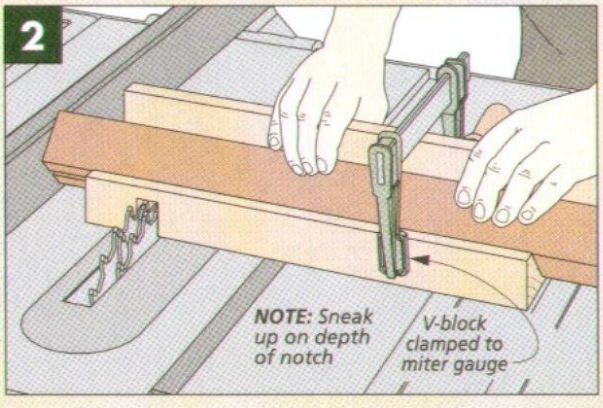

craftsman Sideboard

Traditional mortise and tenon joinery and classic details come together in a not-so-big size.

Just right. That's what comes to mind when looking at this sideboard. Especially the size. Craftsman sideboards of the past can dominate a dining room with their generous proportions. But this one is smaller — scaled for today's homes.

When it comes to the construction, this project takes no shortcuts. It features solid-wood panels and traditional mortise and tenon joinery, which means it's built to last. We've even included a table saw technique for cutting the twin tenons used on the front rail. Turn to page 38 for more on this.

The sideboard shown here is built from white oak. (Cherry would be another great choice). And I'll show you a simple technique to get the distinctive rays and flecks of quartersawn grain on all four leg faces.

CONSTRUCTION DETAILS

OVERALL DIMENSIONS:
45"W x 19"D x 34¾"H

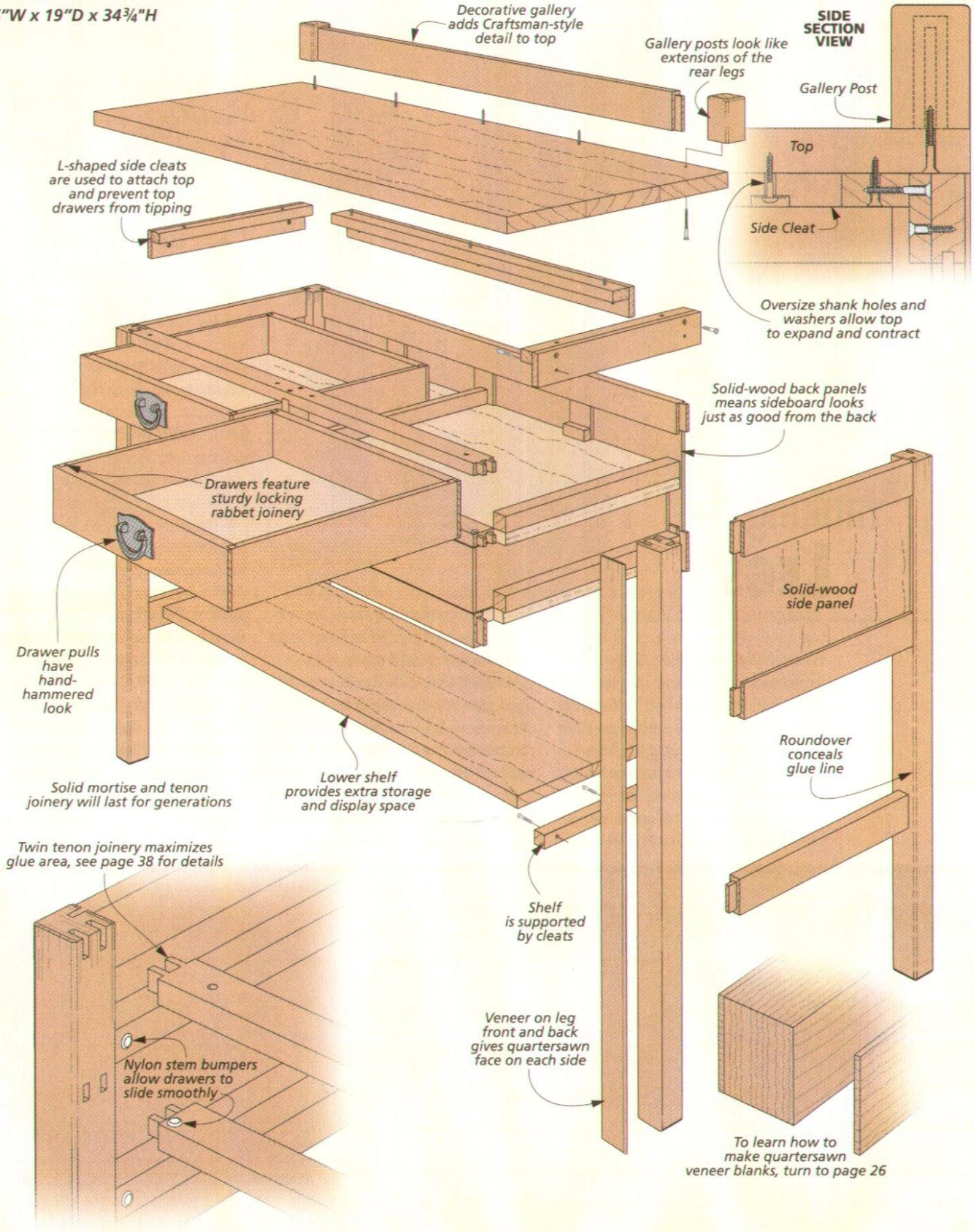

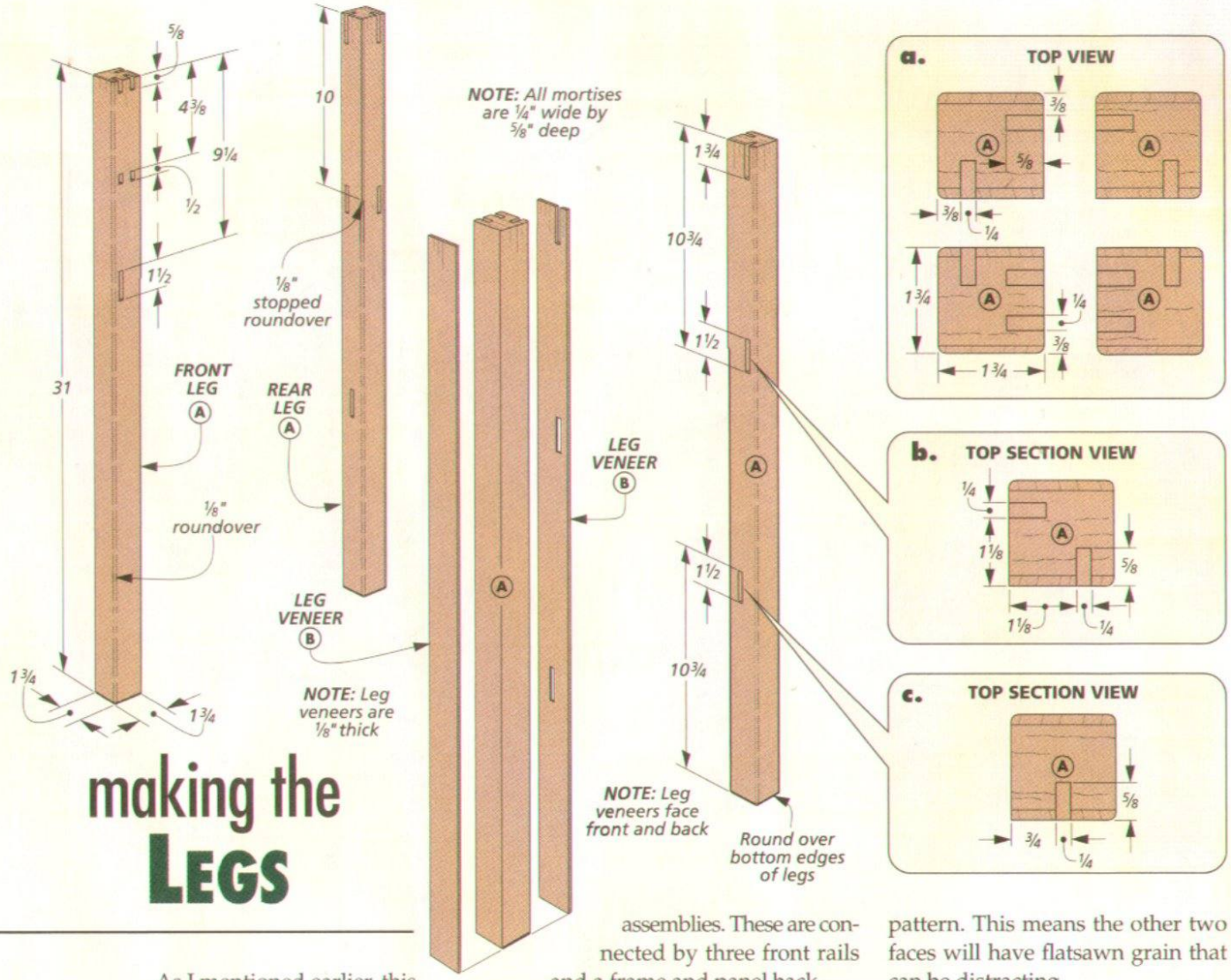

making the LEGS

As I mentioned earlier, this project features sturdy mortise and tenon joinery. And when cutting this joint, I like to cut the mortises first. So, I started by making the legs.

To create the case of the sideboard, two pairs of legs will be joined together with some rails and a solid-wood panel to create two end assemblies. These are connected by three front rails and a frame and panel back.

QUARTERSAWN LEGS. There's something else about the legs that I want to mention. And that's the look. One characteristic of Craftsman-style furniture is the use of quartersawn oak.

On legs, this can be a bit of a problem since only two faces of the leg show the distinctive grain pattern. This means the other two faces will have flatsawn grain that can be distracting.

VENEER FACING. Thankfully, it's not difficult to get a quartersawn face on each side. To do this, I applied pieces of 1/8"-thick veneer to the flatsawn faces, as shown in the drawing above. You can see how I did this on page 26. Then, to conceal the glue line and soften the sharp edges, I

How-To: Mortises & Roundover

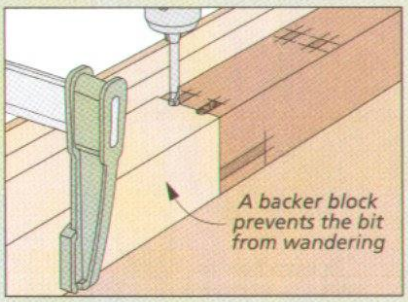

Drill First. *Use a drill press to rough out the mortises. For the open twin mortises at the top of the leg, use a backer to keep the bit from drifting.*

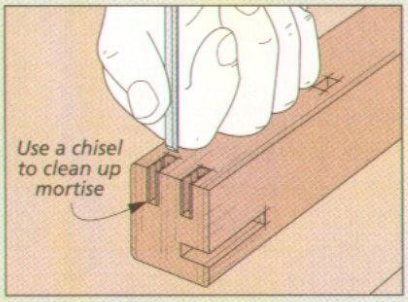

Cleanup Next. *Back at the workbench, you can use a narrow chisel to square up the ends of the mortises. A wider chisel makes quick work of the sides.*

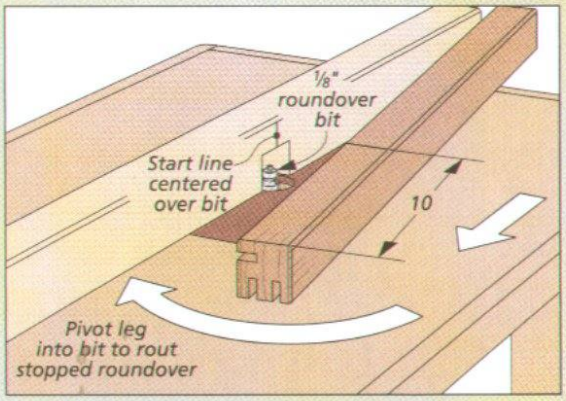

Rout a Roundover. *There's a full-length roundover on three edges. On the inside corner, the roundover is stopped. Draw a layout line on the workpiece and an index line on the fence to guide the cut.*

routed a roundover on all the edges. Note: The roundover on the inside corner is stopped, as shown in the main drawing and in the bottom right drawing on the facing page.

LEG MORTISES. With the legs at their final size, the next step is to start cutting the mortises. The drawings on the opposite page will give you all the details about the size and location of each mortise.

There are two sets of mortises on the legs that I want to point out. And those are the mortises in the front legs that hold the top and middle rails. You'll notice that I cut twin mortises at each location. The reason has to do with the orientation of the matching rails and creating a strong glue joint. An article on page 38 will give you more details.

GROOVES. Once the mortises are complete, you can then connect the side and back sets of mortises with a shallow groove to hold the solid-wood panels, as shown in detail 'd.'

I made the grooves on the router table, and used the mortises as a gauge to set up the router fence. The box below shows you how it's done.

There's one thing to mention about these grooves. For some of them, you can start the cut at the end of the leg (left drawing below). But for the other grooves, you'll need to start the cut in the lower mortise, as shown in the middle drawing below. Here, the mortise acts as a starting point so the workpiece won't catch on the spinning bit.

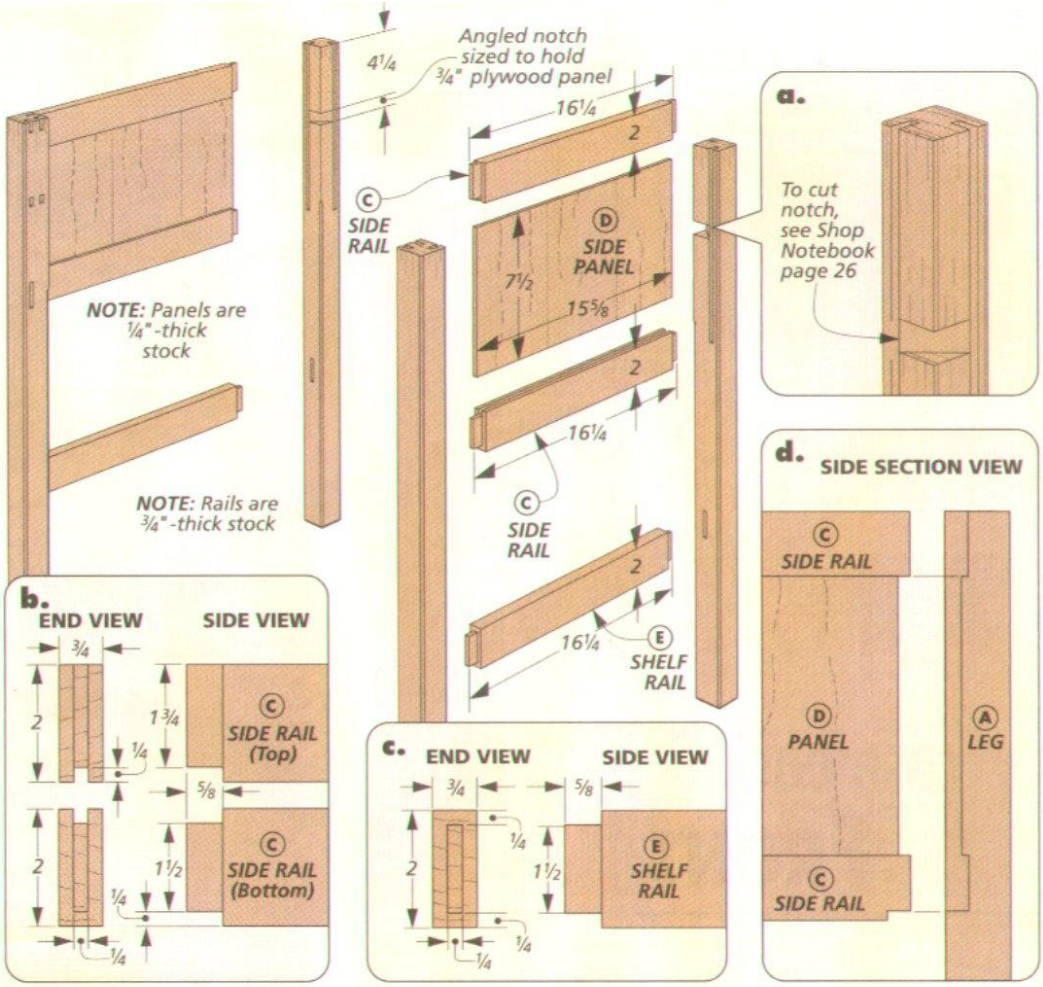

ANGLED NOTCH. After cutting the grooves, there's one more thing you'll need to do is cut an angled notch on the inside corner of the back legs. This notch is sized to hold a ¾" plywood panel. To learn how to cut these notches, turn to page 27.

RAILS AND PANELS. At this point, all the joinery and shaping on the legs is complete, and you can focus your attention on the connecting pieces: the rails and solid-wood panels.

The three rails that connect each pair of legs have a tenon cut on each end to fit the mortises in the legs. The upper two rails also have a groove cut in them that matches the groove in the legs. These grooves will capture a solid-wood panel.

I glued up the ¼"-thick panels from stock I resawed on the table saw. (You can see how to do this on the next page.) With this step complete, the ends can be glued up.

Grooves & Tenons

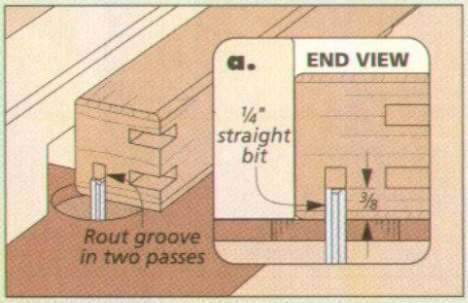

Rout Grooves. *You can rout some of the grooves by starting at the end of the leg. I made two passes to make sure the grooves were smooth and clean.*

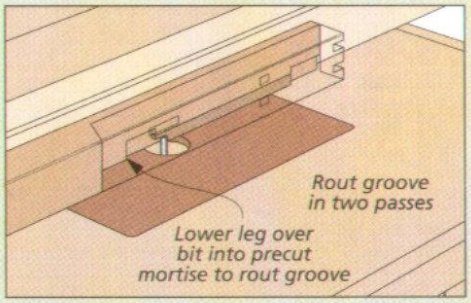

Start in the Middle. *For the other grooves, you'll need to start routing from the middle mortise. To do this, simply lower the workpiece over the bit while taking light cuts.*

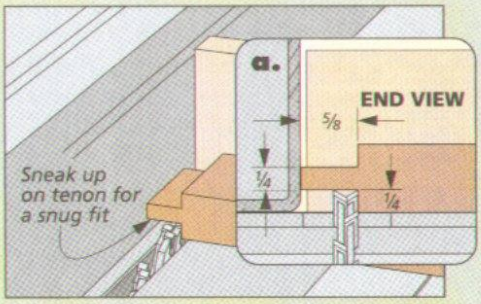

Tenons Last. *After all the mortises and grooves have been cut, you can cut the tenons on the table saw. Doing this last lets you easily adjust the size to fit the mortises.*

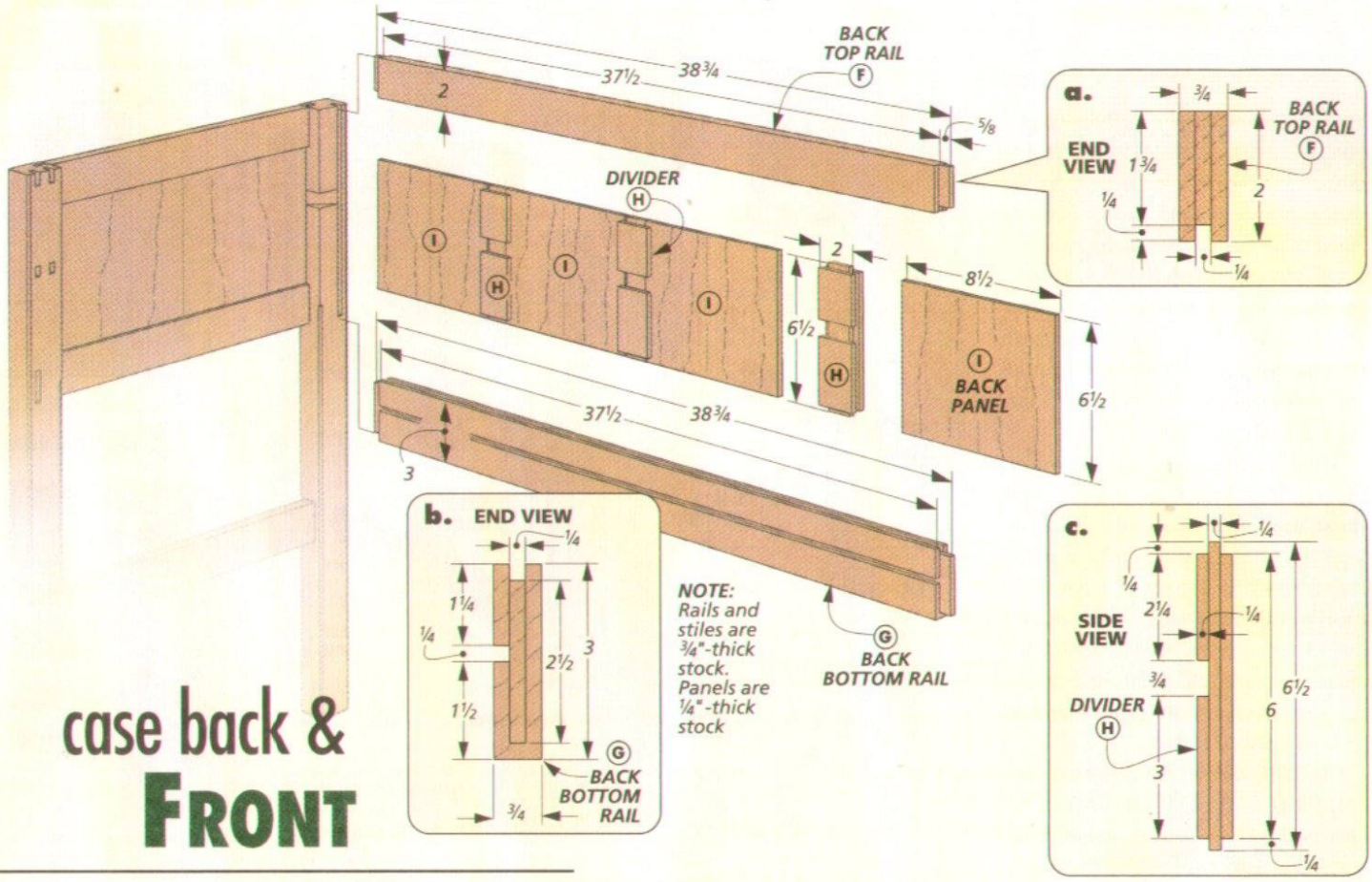

case back & FRONT

Now that the ends are assembled, the next part of the construction connects each end with the case front and back. First, the back is designed to look just as good as the front. This way, it doesn't need to be pushed up against a wall.

FRAME AND PANEL. The only difference between the back and ends is that the back adds three more panels to make up the length, as shown in the drawing above.

I began by cutting the rails and stiles to size making sure to account for the joinery. But before starting on the joinery, I glued up the panels. In the box below, you can see how to resaw panels on the table saw.

JOINERY NEXT. With the panels in hand, you can begin the joinery. The first thing to do is to cut grooves to fit the panels in the rails and stiles. Once the grooves are complete, the next step is to cut tenons on the rails and stub tenons on the stiles.

There are a couple of things left to do on the back before you can assemble it. First, I cut a groove in the lower rail, as illustrated in detail 'b.' This groove will hold a plywood dust panel that supports the large, bottom drawer that's built later.

The other detail is a dado that's cut across the stiles. Like the groove in the lower rail, the dado will help support the upper dust panel, as in detail 'c.' The dado is located so that it aligns with the angled notches cut in the back legs.

BACK ASSEMBLY. At this point, I glued up the back. This will make assembling the case go smoother later on.

How-To: Resawing on the Table Saw

One way to get the thin stock you need for the panels in the sideboard is to resaw them from the same stock you're using for the other parts of the project. This way, you can be sure of a good grain and color match.

All it takes is the two-step process shown at right. A rip blade and zero-clearance insert will give you the smoothest cut. I like to cut the pieces a about 1/32" thicker. This allows you to clean up any saw marks. Then the panels can be glued up and cut to size.

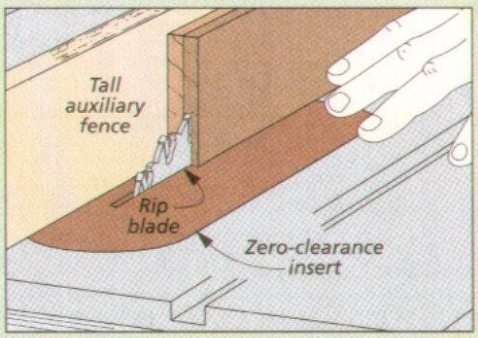

First Cut. *For boards more than 3" wide, set the blade height to less than half the workpiece width. Then make a cut.*

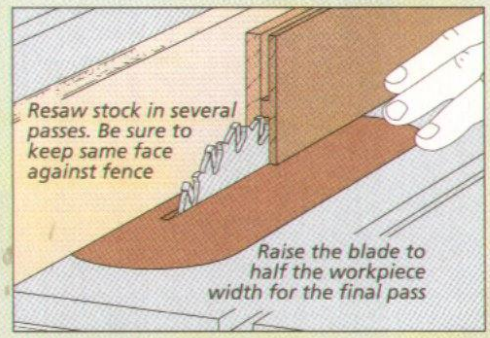

Next Cut. *Flip the board end for end and make another pass. Raise the blade and repeat these steps until the piece is cut.*

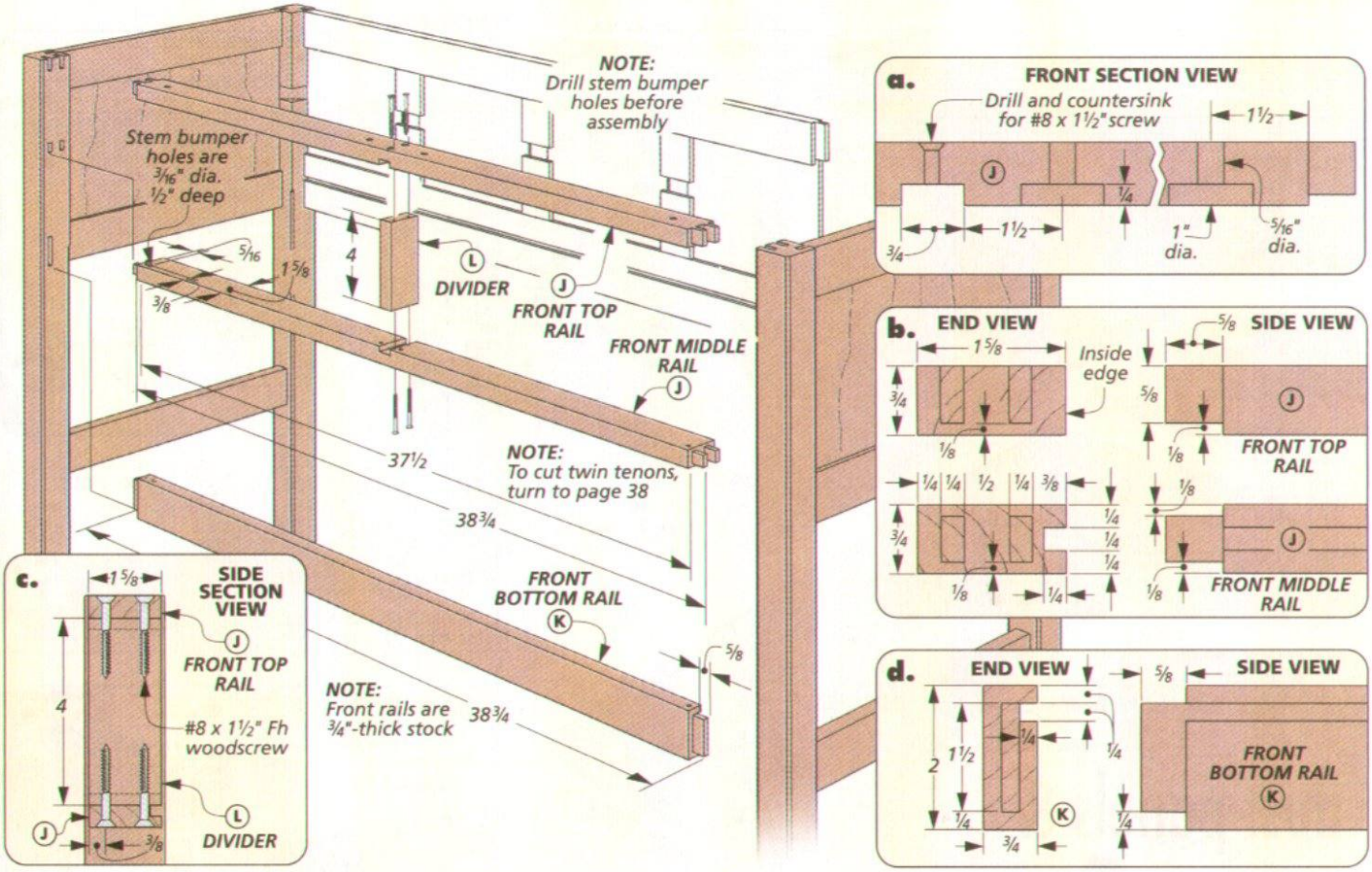

I applied glue only to the stub tenons. Then I clamped the rails in the case ends to keep things square.

FRONT RAILS. On the front of the sideboard, the construction is much simpler. Here, the three drawers are framed by rails and a short vertical divider, as you can see in the drawing above. This seems simple enough, but the challenge is to make sure that the joinery on these rails will stand up to a lot of use.

A traditional mortise and tenon joint on the lower rail is the perfect choice for a long-lasting connection. But, I went with something a little different for the other rails.

Since these rails are so narrow, there isn't a lot of long-grain glue surface. To gain more glue area, I used a twin mortise and tenon. As you might guess, the process used to cut this joint is a little different. You can see how it's done on page 38.

DIVIDER. There are a few other details to mention. First off, I cut a centered dado in the top and middle rails to hold a short divider.

I also went ahead and drilled some holes in the top rail. These will be used to secure the top, as you can see in detail 'a.'

The middle and lower rails share one last detail. I cut a groove on the inside face of each piece. These grooves will support plywood dust panels that are added later.

Before moving on to making the dust panels, I assembled the top rail, divider, and middle rail. Like pre-assembling the back, it takes some of the hassle out of gluing up the case.

Divider Dadoes & Dust Panel Grooves

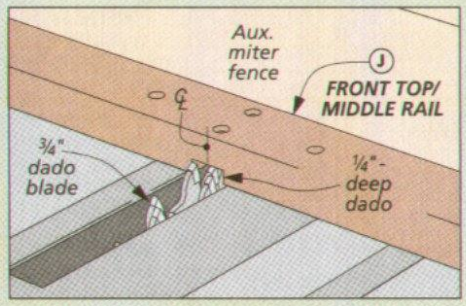

Divider Dado. *Set the dado blade to match the size of the divider. Then cut matching dadoes in the front top and middle rails. An auxiliary fence will prevent tearout.*

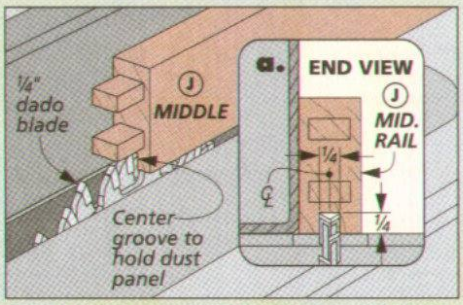

Dust Panel Groove. *Change to a 1/4" dado blade and cut a centered groove on the inside edges of the middle rail. This will hold a plywood dust panel that's added later.*

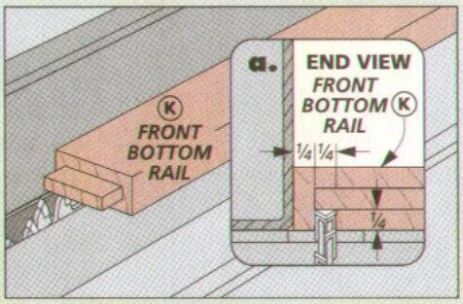

Offset Groove. *The front bottom rail gets a dust panel groove as well. Best of all, you can cut it without having to change the dado blade and rip fence setting.*

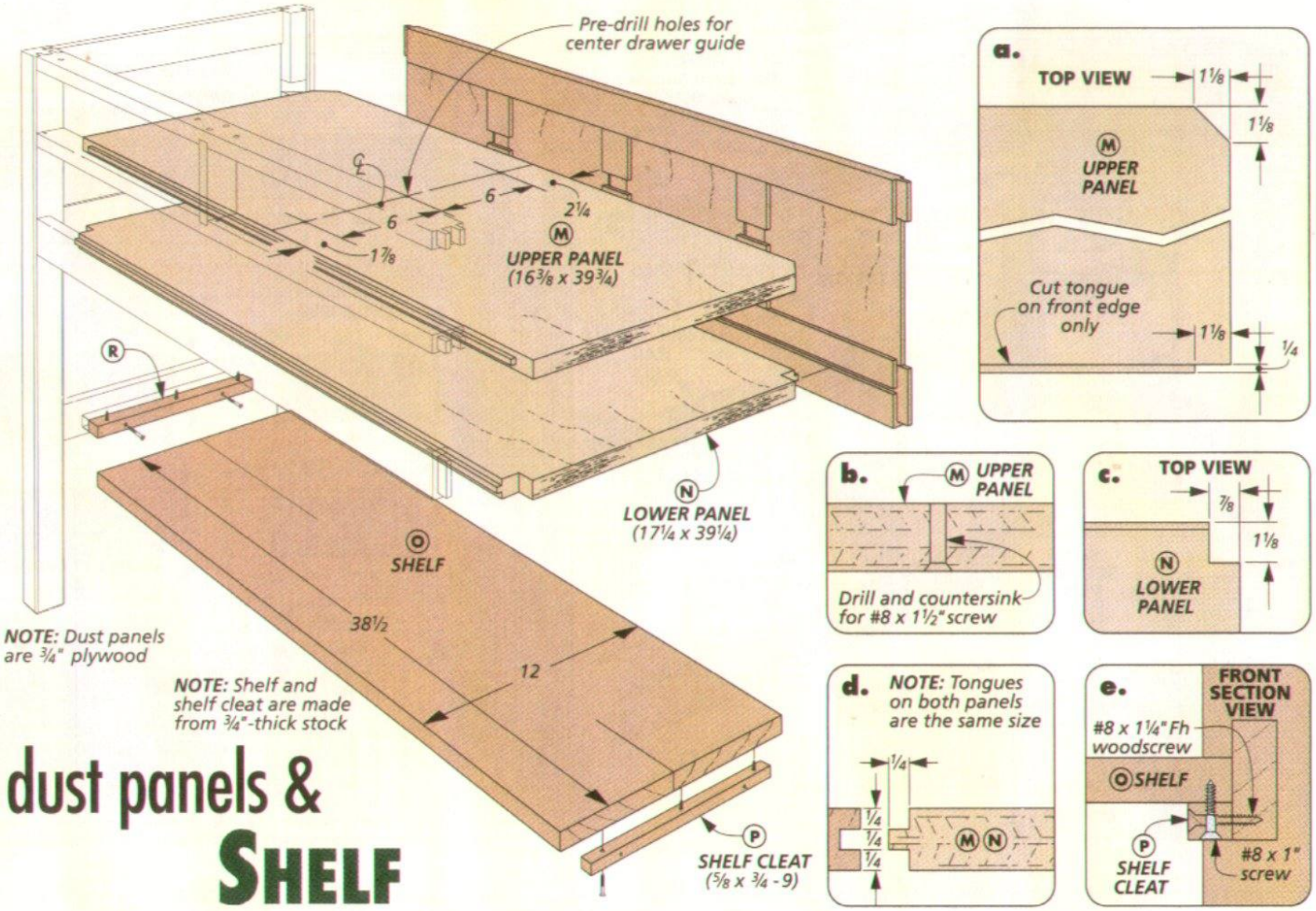

dust panels & SHELF

There are just a few pieces left to make to complete the case. First, to divide the case and support the drawers as they slide in and out, I made two plywood panels.

UPPER PANEL. In the drawing above, you can see that the two panels are slightly different. The upper panel has a tongue cut along the front edge to fit the groove in the rail. Where the panel meets the front legs, I trimmed back the tongue, as in detail 'a.'

Then, to fit the angled notches in the back legs, the back corners of the panel are "dog-eared."

LOWER PANEL. The lower dust panel is more straightforward. It has a tongue along both the front and back edges to fit the grooves in the front and back rails. Then a notch is cut in each corner so the panel can wrap around the legs (detail 'c').

CASE ASSEMBLY. With these panels complete, you're ready to glue up the case. The box below gives you a good idea of the steps involved. Before getting out the glue bottle, it's a good idea to do a dry-assembly of the whole process. This way you can work out any kinks or do any final fitting of the joints.

LOWER SHELF. After the case is glued up, you can make the bottom shelf. This is nothing more than a glued up panel. It gets attached to the rails with a couple of cleats (detail 'e').

How-To: Assembly

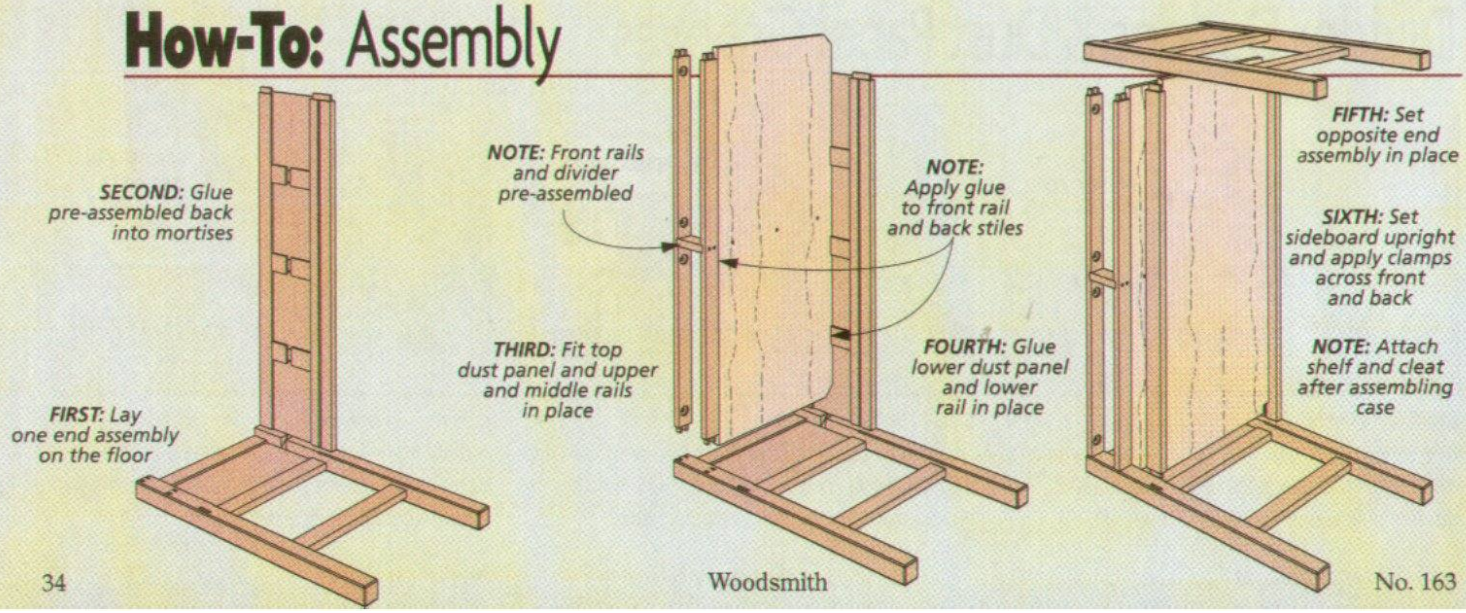

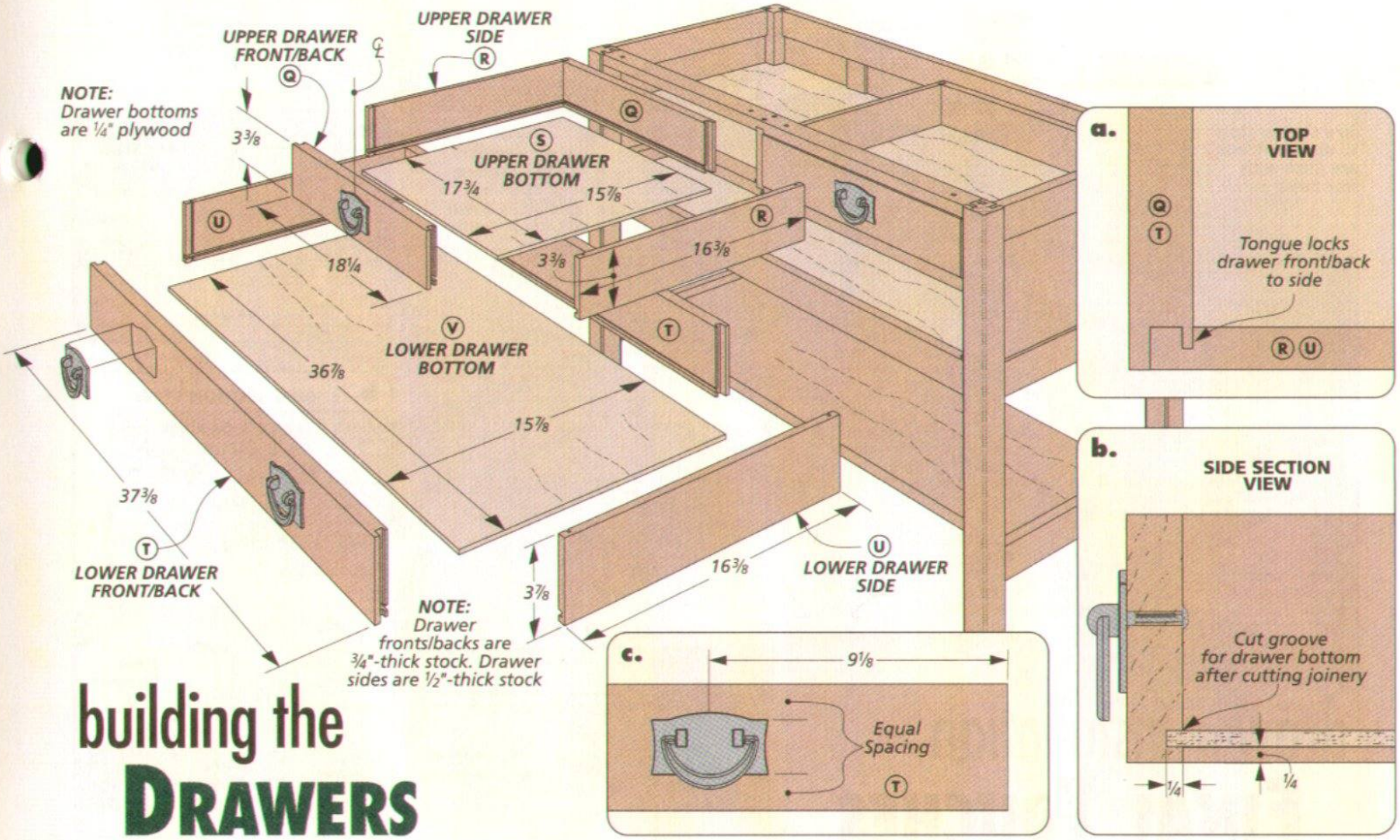

building the DRAWERS

With the case of the sideboard complete and assembled, you're more than halfway done with the project. Now, you can build the drawers and later on, you'll add the top.

LOCKING RABBET JOINT. Even though there are two different sizes of drawers, all the joinery is the same (detail 'a'). So after cutting the drawer parts to size, you can cut all the joinery at one time.

The joint I used here is a locking rabbet. This interlocking joint offers a lot of glue surface. And it can be cut on the table saw (see box below).

The first step is to cut a slot in each end of the drawer front and back. To do this, the workpiece is held vertically on the saw table.

The second step is to trim a bit off the inside edge of this notch. This provides clearance for the drawer side to fit in place.

To complete the joint, you'll cut a dado near each end of the drawer side. This dado is sized to hold the inside tongue that you just trimmed. The dado is positioned so that it fits over the tongue in the mating piece.

ADD THE BOTTOM. After the joinery is complete, you can cut a groove in all the parts to hold the bottom.

There's just one thing left to complete the drawers. And that's to attach the pulls. The arched backing plate can make positioning them tricky. I "centered" the plate on the width of the drawer using the corners as a guide, as in detail 'c.'

Three-Step Drawer Joint

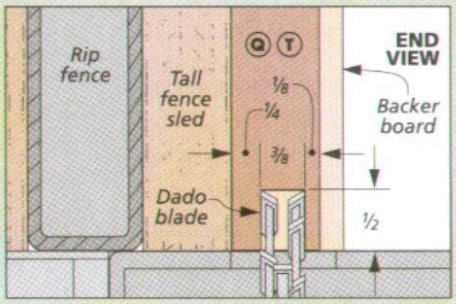

Slot. *To make a locking rabbet, start by cutting a slot in each end of the drawer front and back. The depth of the slot should match the thickness of the sides.*

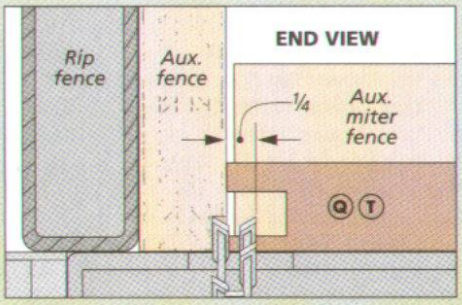

Tongue. *Next, cut back the inside tongue of the slot. I used the rip fence as a stop and supported the workpiece with an auxiliary fence attached to the miter gauge.*

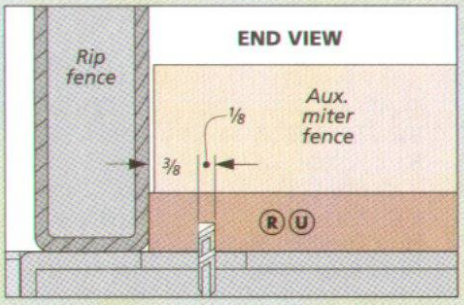

Dado. *The final step is to cut a dado in the side pieces. The dado should match up with the tongue on the front and back, so that the side fits snugly into the slot.*

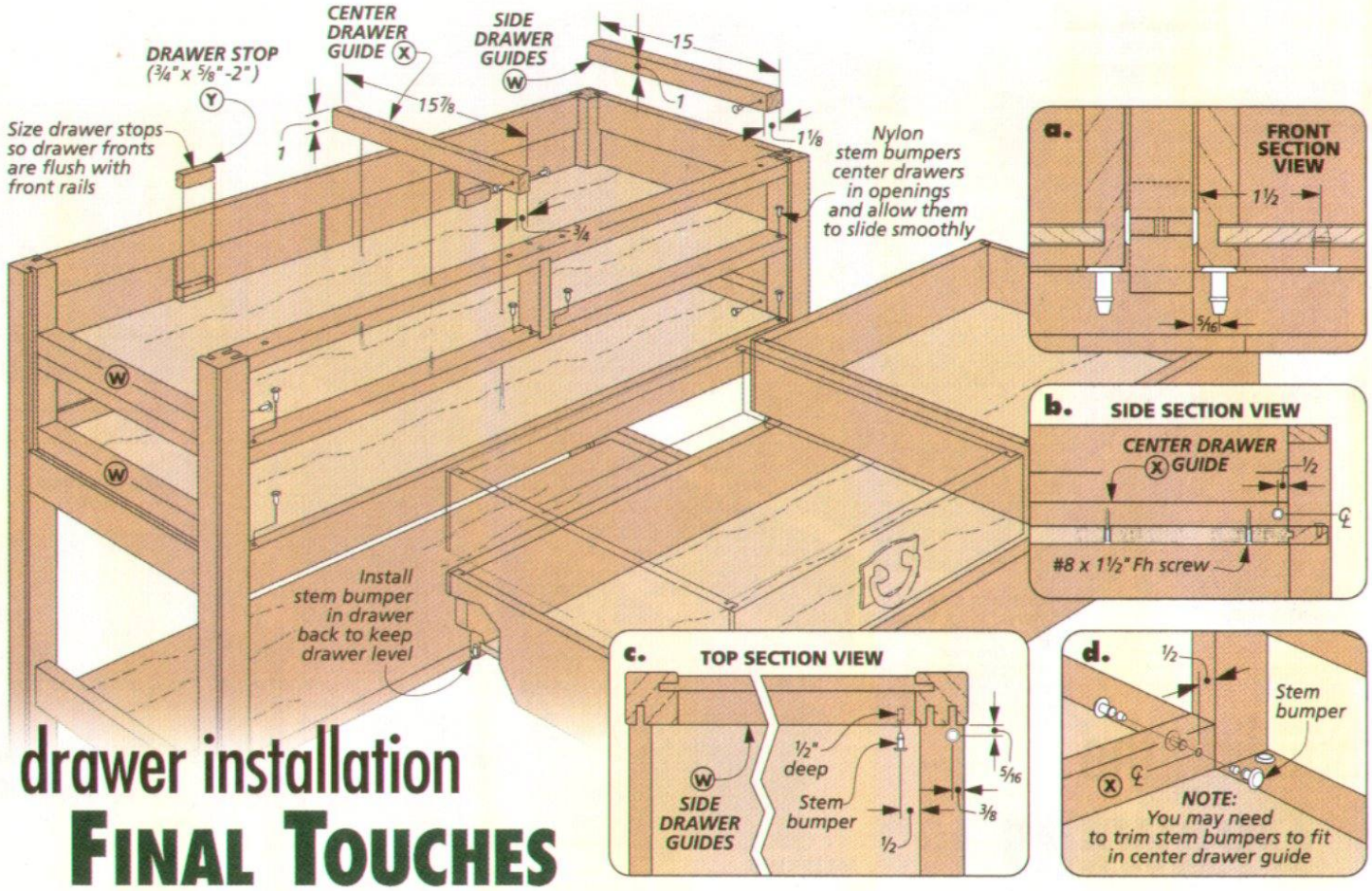

drawer installation
FINAL TOUCHES

Even though the drawers are complete, there are still a few things left to do to fit them to the sideboard.

DRAWER RUNNERS. To keep the drawers from binding in their openings, I cut a pair of side guides and a center guide. The side guides fill the space between the legs. The width of the center guide is the thickness of the vertical divider.

PLASTIC BUMPERS. I wanted to keep the drawers in the sideboard centered in their openings. And the way I did this was to use some stem bumpers, as shown in detail 'a'. These mushroom-shaped plugs fit in the holes that were drilled earlier.

I mounted a pair near the front of each drawer opening to center the drawer side to side. Then to make the drawers run as smoothly as possible, I installed another pair of bumpers in the front rails as in details 'c' and 'd.' Besides providing a friction-free glide for the drawers, these bumpers center the drawers top to bottom and create a consistent gap on all four sides. One last set of bumpers is installed in the drawer backs. They keep the drawers level as you slide them in and out.

DRAWER STOPS. The final step to fitting the drawers is to add some drawer stops. I used one stop for each of the upper drawers and a pair of stops for the wide, lower drawer. What you're looking for is the drawer fronts to be flush with the front rails and vertical divider.

Materials & Supplies

A	Legs (4)	1½ x 1¾ - 31
B	Veneers (8)	⅛ x 1⅞ rgh. - 31¼ rgh.
C	Side Rail Top/Bottom (4)	¾ x 2 - 16¼
D	Side Panels (2)	¼ x 15⅝ - 7½
E	Shelf Rails (2)	¾ x 2 - 16¼
F	Back Top Rail (1)	¾ x 2 - 38¾
G	Back Bottom Rail (1)	¾ x 3 - 38¾
H	Back Stiles (3)	¾ x 2 - 6½
I	Back Panels (4)	¼ x 8½ - 6½
J	Front Top/Mid. Rails (2)	¾ x 1⅝ - 38¾
K	Front Bottom Rail (1)	¾ x 2 - 38¾
L	Drawer Divider (1)	¾ x 1⅝ - 4
M	Upper Panel (1)	¾ ply. - 16⅜ x 39¾
N	Lower Panel (1)	¾ ply. - 17¼ x 39¼
O	Shelf (1)	¾ x 12 - 38½
P	Shelf Cleats (2)	⅝ x ¾ - 9
Q	Up. Drawer Fr./Bk. (4)	¾ x 3⅜ - 18¼
R	Up. Drawer Sides (4)	½ x 3⅜ - 16⅜
S	Up. Drawer Bot. (2)	¼ ply. - 15⅞ x 17¾
T	Lwr. Drawer Fr./Bk. (2)	¾ x 3⅞ x 37⅜
U	Lwr. Drawer Sides (2)	½ x 3⅞ - 16⅜
V	Lwr. Drawer Bot. (1)	¼ ply. - 15⅞ x 36⅞
W	Side Drawer Guides (4)	1 x 1⅛ - 15
X	Center Drawer Guide (1)	¾ x 1 - 15⅞
Y	Drawer Stops (4)	¾ x ⅝ - 2
Z	Top (1)	1 x 19 - 45
AA	Gallery Posts (2)	1½ x 1¾ - 2¾
BB	Gallery Veneers (4)	⅛ x 1⅞ rgh. - 3 rgh.
CC	Gallery Rail (1)	¾ x 2½ - 38¾
DD	Side Cleat Tops (2)	¾ x 1 - 14
EE	Side Cleats (2)	½ x 2 - 14
FF	Back Cleat Top (1)	¾ x 1½ - 30
GG	Back Cleat (1)	½ x 2 - 30

- (12) #8 x 1¼" Fh Woodscrews
- (13) #8 x 1" Fh Woodscrews
- (11) #8 x 1½" Fh Woodscrews
- (18) Nylon Stem Bumpers
- (4) 3⅝" x 1⅞" Drawer Pulls w/Screws
- (5) #8 x 2" Fh Woodscrews
- (8) ¼" Flat Washers
- (8) #8 x 1¼" Ph Woodscrews

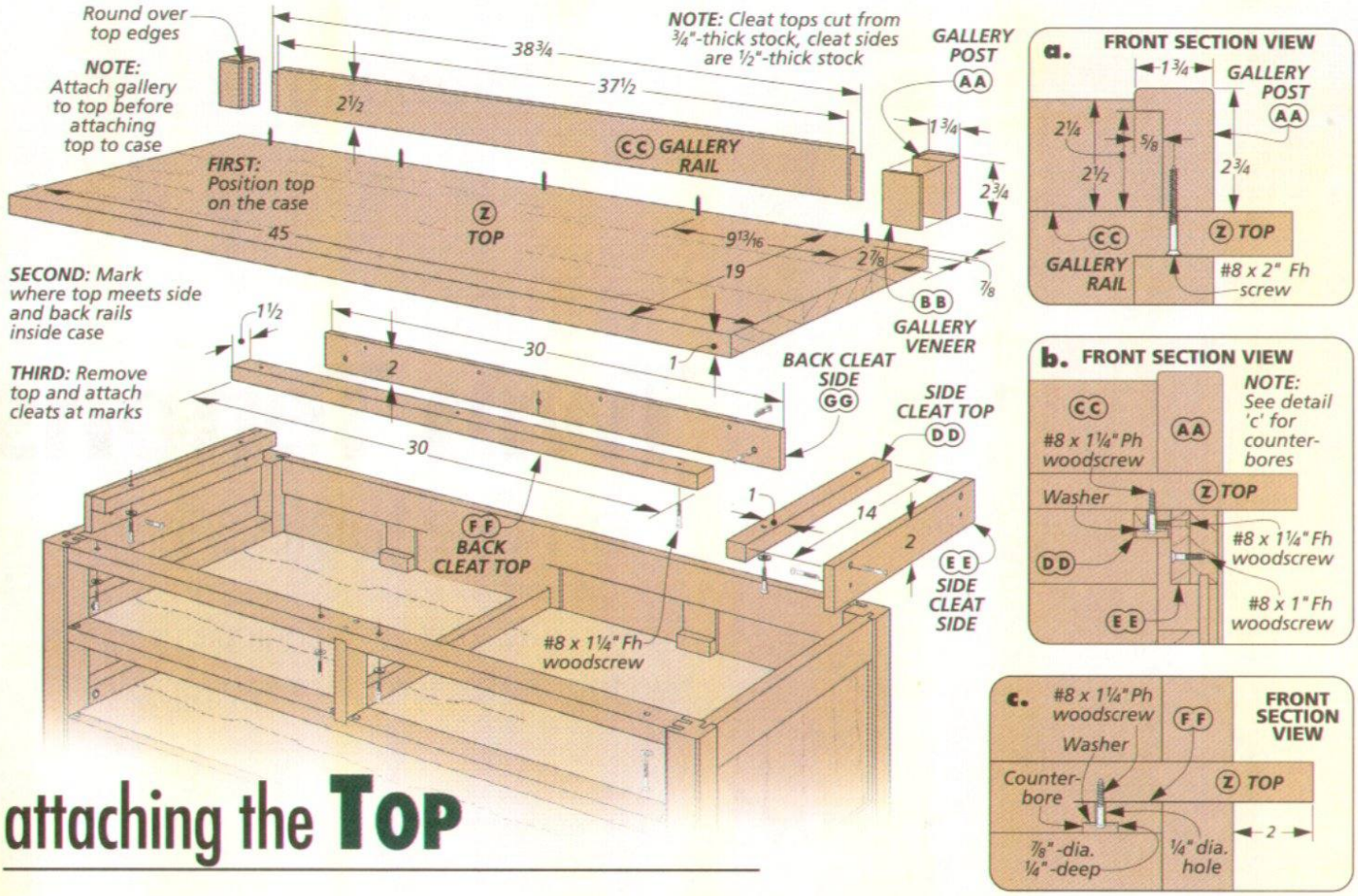

attaching the **Top**

You're down to the last section of the sideboard to make — the top assembly. This consists of a solid-wood top panel and a gallery, as illustrated in the drawing above. This assembly is then attached to the sideboard to complete the project.

TOP AND GALLERY. There's not much that goes into making the top. It's simply a glued-up panel. Once you have it smoothed and sized, you can build and add the gallery.

The gallery is made up of three parts: two posts and a rail. The posts are positioned to make the rear legs of the sideboard appear to extend through the top. So I made the posts the same way as the legs with quartersawn veneers on the front and back. The final detail on the posts is to cut a mortise in each one, as shown in detail 'a.'

The rail is pretty simple. It's simply cut to size and then a matching stub tenon is cut in each end. Once assembled, the gallery is screwed to the top from below.

ATTACHING THE TOP. Now that the top is complete, you can attach it to the sideboard. The first challenge here is getting the top centered and then fastened to the case.

The top is screwed to the case through the top front rail and L-shaped cleats on the sides and back. Because it would be difficult to reach inside the case and screw the cleats to the top, I attached the side and back cleats to the top first. Then all you need to do is attach the cleats to the case with screws, as you can see in details 'b' and 'c.'

Finally, you can slide the drawers back in the case, and the sideboard is ready for a finish. W

Cutting Diagram

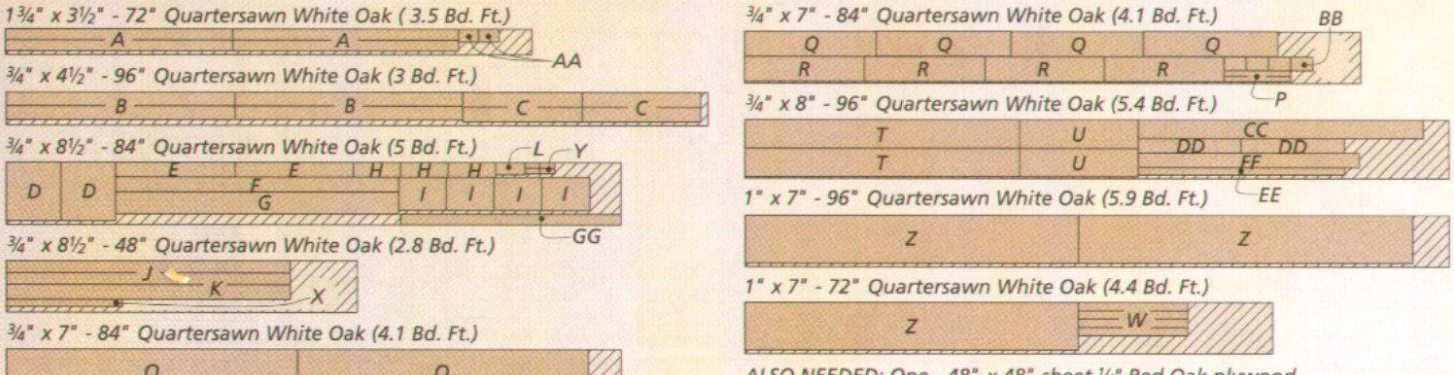

ALSO NEEDED: One - 48" x 48" sheet ¼" Red Oak plywood
One - 48" x 48" sheet ¾" Red Oak plywood

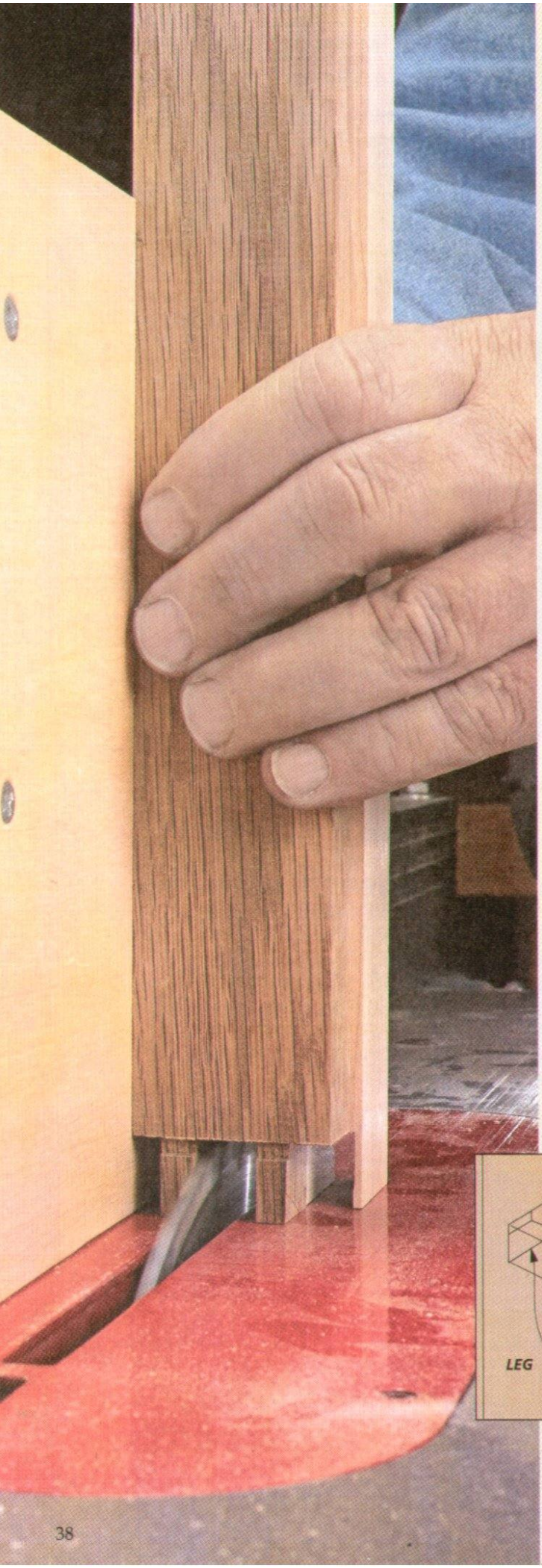

cutting **Twin Tenons** on the table saw

This easy-to-master technique gives you two tenons for a much stronger joint.

If you take a look at the plans for the Craftsman sideboard on page 28, you'll notice something a little different about the joinery used to connect the front upper and middle rails to the front legs. Two small, vertical tenons or twin tenons are cut on the ends of each rail. These twin tenons fit matching twin mortises in the legs. The question you might have is, why not simplify the job by just cutting a single wide mortise in the legs and a single tenon on the rails?

A STRONGER JOINT. Well, the reason for using this joinery is easy to explain. In a nutshell, two narrow tenons mating with two mortises gives you more good gluing surface and a much stronger joint. When you take a look at the two drawings below, you'll get the idea.

The important gluing surface in the leg-to-rail joint is the vertical, long-grain sides of the tenons and mortises. The top and bottom of the mortise (or mortises) is porous end grain that provides little gluing strength. So, you can easily see that the two mortises and two tenons in the right drawing provide twice as much long-grain to long-grain gluing surface as the single wide tenon at left.

MAKING THE JOINT

To get the maximum benefit from a twin mortise and tenon, you want the joint to fit pretty snug. The key to this is to take it slow.

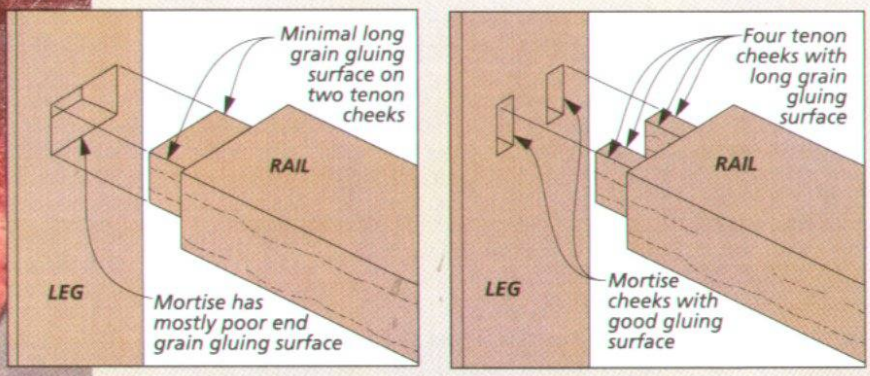

The drawings above show why a twin mortise and tenon (right) has double the gluing surface of the single mortise and tenon (left). The long grain surface on the sides of the mortises and tenons is what you're after.

MORTISES FIRST. As with a single mortise and tenon, I start with the mortises. There's nothing different about this part of the job — it's just cutting a mortise "times two." I drill out the mortises and then clean them up with a chisel.

NOW, LAYOUT. Once the mortises are finished, I use them to lay out the tenons on the ends of the rails (right photo). This helps ensures a perfect match in the completed joint.

THE TENON TECHNIQUE. The challenge now is to accurately cut the tenons on the ends of the rails. The drawings below will give you a step-by-step rundown of the process. But first, take a good look at the main photo on the opposite page. This will help explain a couple of the keys to success here.

HOW IT WORKS. The only practical way to cut away the waste between the two tenons on the table saw is with the workpiece standing on end. So once you've cut a clean shoulder line, the rest of the work is done with the workpiece supported vertically by a simple tenoning jig that rides on the rip fence of the saw. (For details on making this tenoning jig, see Shop Notebook on page 27.) The big advantage to cutting all the tenon cheeks vertically is that it allows you to leave the saw blade set at one height. Then you can sneak up on the tenon size by carefully adjusting the position of the rip fence.

THE FIRST CUTS. At the table saw I get started by making a shallow shoulder cut around all four sides, as shown in Step One (only three sides of the upper rail). This eliminates any worry about chipout when the cheeks of the tenons are cut.

TENONING JIG. Now, you can put the tenoning jig to work. First, I cut the outside cheeks of the two tenons, one at a time (Step Two). With the height of the blade set a hair below the shoulder line, the trick is to start at the outside edge and sneak up on the layout line by nudging the rip fence over. The layout lines guide the cuts and I use the mortises to check the size. After cutting the outside cheeks of the tenons, the remaining width should "span" the two mortises exactly.

The inside waste is removed in the same way. Start with a cut in the middle and then work toward the cheek line of the front tenon. Here, I use the mortises to test the fit. When Step Four is complete, you should be able to tip the corners of the tenons into their mortises.

At this point, the toughest part is over. The last job at the saw is to nibble away the top and bottom waste (bottom only on top rail) until the tenons slip easily into their mortises (Step Five). And finally, I take the rails to the bench and get out a chisel to carefully pare away the remaining shoulder waste.

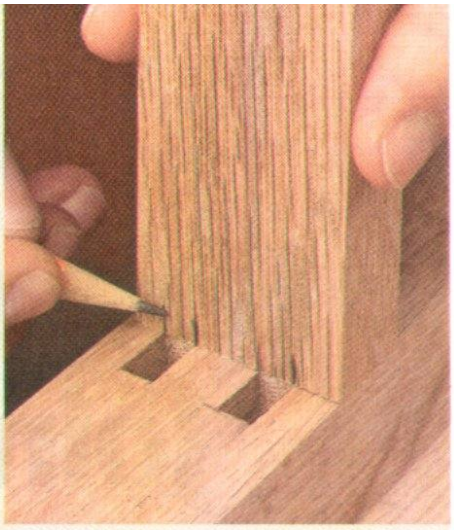

▲ The completed mortises provide an accurate guide for laying out the tenons on the ends of the rails.

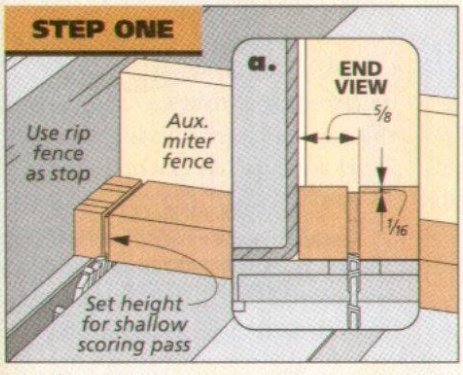

The first step is to "score" a clean shoulder with a shallow cut on all four sides of the workpiece. The rip fence acts as a stop.

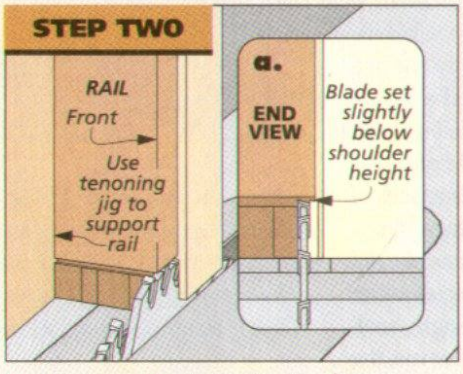

Next, using the tenoning jig for support, begin at the outside edge of the rail and nibble away the waste back to the "cheek" line.

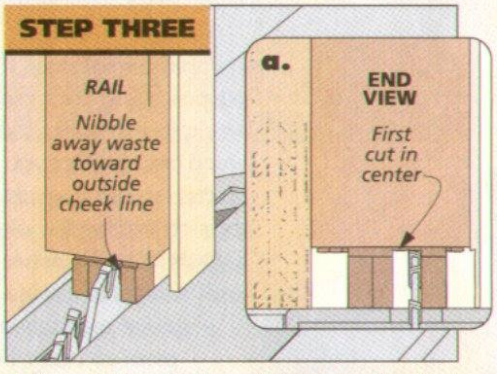

After cutting both outside cheeks, start removing the waste between the tenons. First, sneak up on the front, inside cheek.

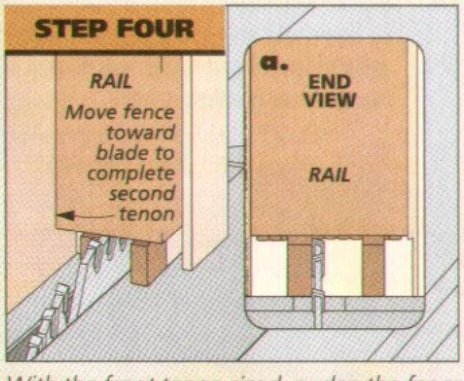

With the front tenon sized, nudge the fence in the opposite direction and work back toward the inside cheek of the rear tenon.

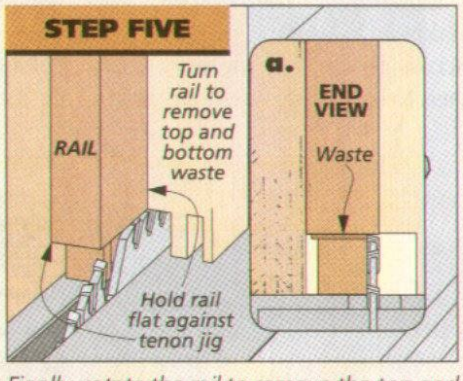

Finally, rotate the rail to remove the top and bottom waste. Sneak up on the final size by flipping the rail side for side.

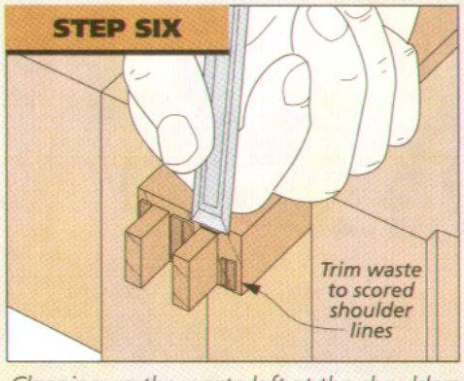

Cleaning up the waste left at the shoulders will complete the tenons. Some careful paring with a sharp chisel will do the job.

Biscuit Joinery

7 simple techniques for case construction

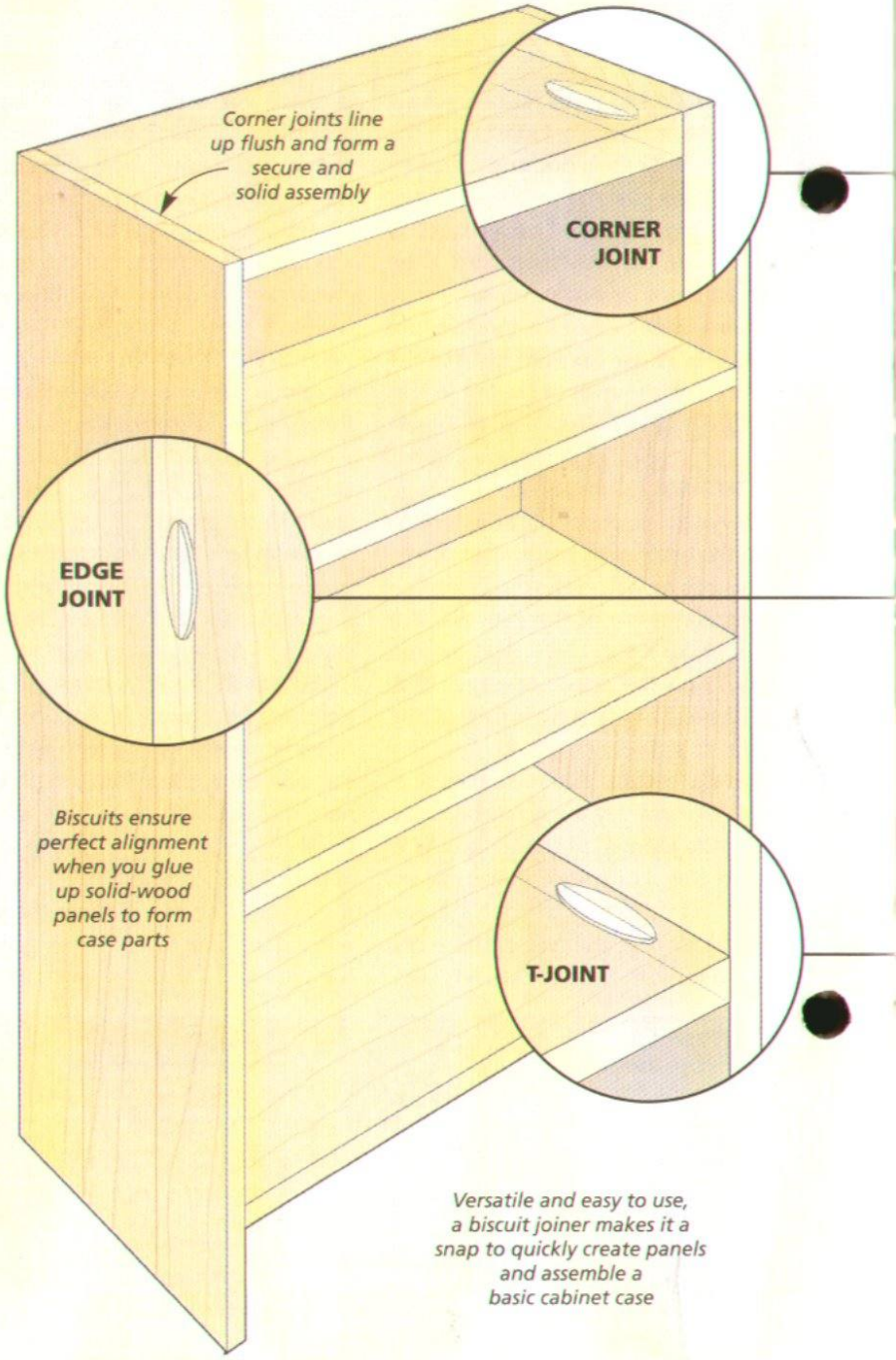

Versatile and easy to use, a biscuit joiner makes it a snap to quickly create panels and assemble a basic cabinet case

When it comes to sheer versatility, nothing beats a biscuit (or plate) joiner for making quick work of creating a wide range of joints for a project.

A biscuit joiner, like the one below, is a pretty simple tool. It only has one purpose — to cut a curved slot in a workpiece to hold a football-shaped wood biscuit. Once you add glue, the biscuit swells up against the faces of the slot, locking the joint together.

ADVANTAGES. There are a number of advantages to using a biscuit joiner — ease of assembly, strength, foolproof accuracy. But for me, the most important is speed. Laying out the joint is just a matter of butting the pieces together and making a mark across the joint. Then to cut the slot, align the centerline of the biscuit joiner with the layout line and push the blade into the workpiece.

Besides speed, a biscuit joiner also has a built-in "fudge factor." To allow for easy alignment of the joint, the slots are cut slightly long. So unlike a dowel joint where the holes need to line up perfectly, the extra side-to-side play allows you to slide the pieces into perfect alignment.

So what can you do with a biscuit joiner? Just about anything, as you'll see on the next few pages.

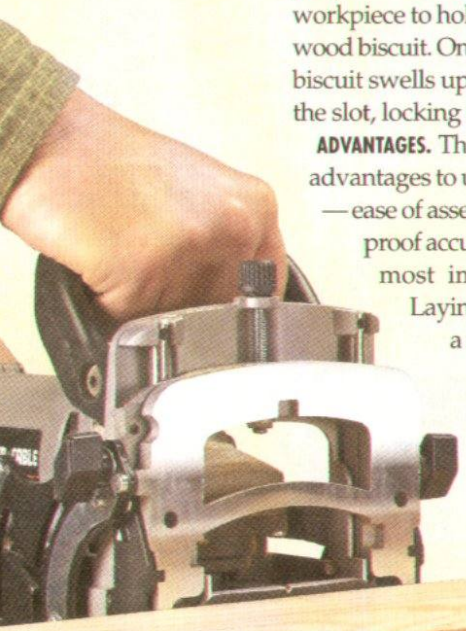

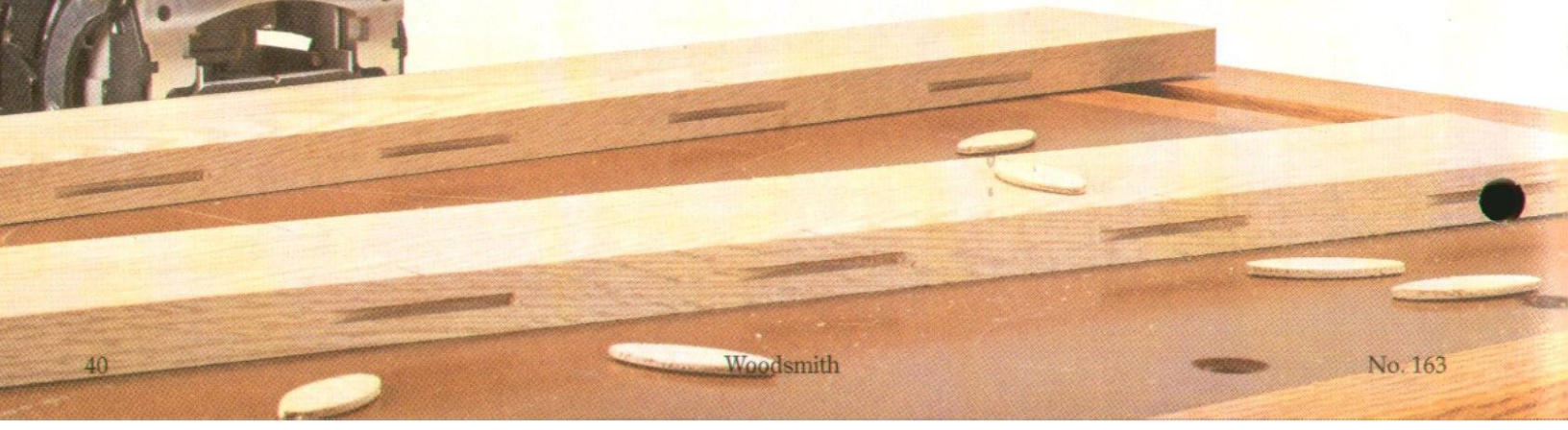

Assembling Corners

One of the most basic joints you can create with a biscuit joiner is the one used to assemble a case at a corner. Here, the *end* of one piece simply butts into the *face* of the other piece, as shown in the main drawing.

LAYOUT. A corner joint begins like any other biscuit joint. The pieces are set together and layout lines are drawn on the outside face and end. Next, the slots are cut in the end of one piece, using the fence to support the joiner and provide an accurate reference, as in the drawing at right.

PROVIDING SUPPORT. The trick comes when you're cutting the slots on the face of the mating piece. Here, the fence needs to rest on the end of the workpiece (right drawing). It can be a tough balancing act to keep both the fence and narrow face plate tight and flat against the thin workpiece.

To solve this problem, I make the workpiece "thicker" by resting it on top of the mating piece with the ends and edges flush, like you see in the right drawing above.

Once you do this, completing the joint is a lot easier. There's more support for the fence since you reference it against both workpieces as you cut the slots.

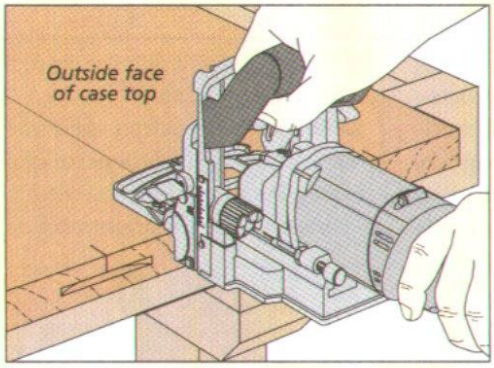

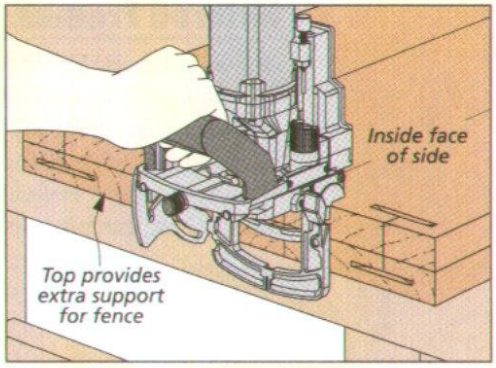

Gluing Up Panels

Any time you build a project out of solid wood, you'll most likely have to glue up a number of boards to create a wide panel. In most cases, this isn't a problem. But if the panels are long or made up of quite a few boards, keeping everything perfectly aligned can test your patience and skill.

PERFECTLY FLUSH. To minimize the hassle, you can turn to your biscuit joiner. By placing biscuits along the edge, the surfaces end up flush. Now there are a couple things to keep in mind as you do this.

First, I like to cut centered slots about every 6" to 12", depending on the flatness of the boards I'm working with. As you do this, be sure you don't locate a biscuit too close to the ends. This way, you don't have to worry about cutting into it when you trim the panel to final length.

NO GLUE. And second, you don't need to add glue to the biscuit joints. They're only there for alignment. Skipping the glue means you have one less thing to worry about.

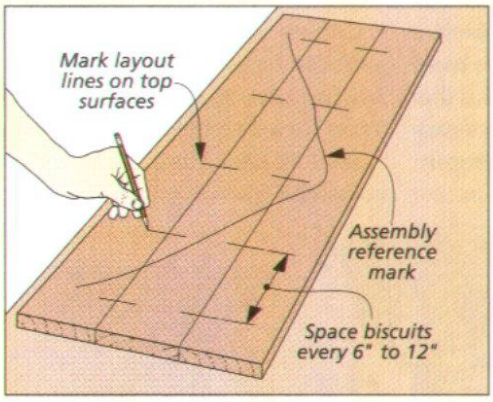

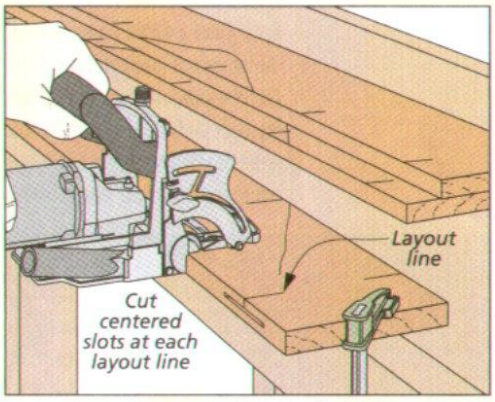

Adding Case Dividers

Another joint that's very similar to the corner joint is a T-joint. It's used to add panels between the sides of a case (see drawing at left). The problem here is finding an accurate reference for the biscuit joiner.

REFERENCE LINE. To solve this problem, the first step is to draw a layout line that locates the *bottom* edge of the divider on the side piece. Then simply clamp the divider flush with this layout line, like you see in the first drawing at right.

Once that's done, you can lay out the centers of the biscuits on both the sides and dividers. At this point, you're ready to begin cutting the slots in each workpiece.

REFERENCE THE BASE. You'll notice in both drawings that the fence isn't used to reference the cut. Instead you'll use the base. After cutting the slots in the divider with the base resting flat, you cut the slots in the sides by standing the joiner on end with the base tight against the divider.

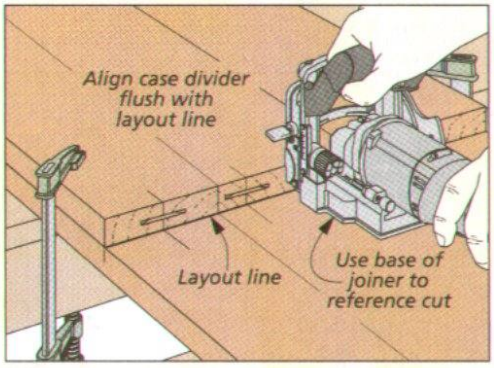

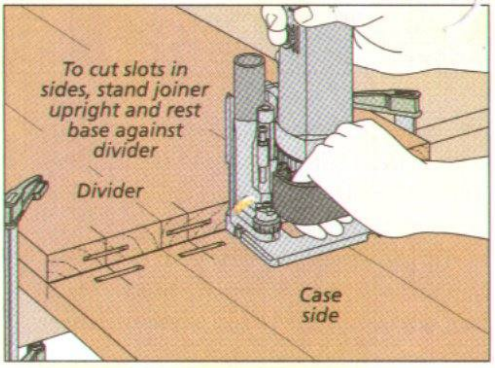

Mitered Frames

One of the things I like about mitered frames is the clean look that's created — you don't see any endgrain. But there is a problem. The endgrain to endgrain joint is weak. And in most cases, the joint needs some extra reinforcement. It's the perfect use for a biscuit joiner.

SIMPLE LAYOUT. As you can see in the lower left drawing, laying out the joint is as simple as it gets. All you need to do is draw a single reference line across the miter joint. And just like gluing up a panel, cutting the slots in each workpiece is a just a matter of using the fence and outside face as a reference. The slot is centered on the thickness of the workpiece and the length of the miter.

SIZING THE BISCUITS. Since mitered frames are typically made from narrower stock, you'll need to be sure the biscuits you're using aren't too long. But this is also one of the "advantages" of a mitered frame. The mitered face is longer than the width of the workpiece. So you can add a biscuit to a very narrow workpiece (down to 1 9/16" for a #0 biscuit) without the slot being visible.

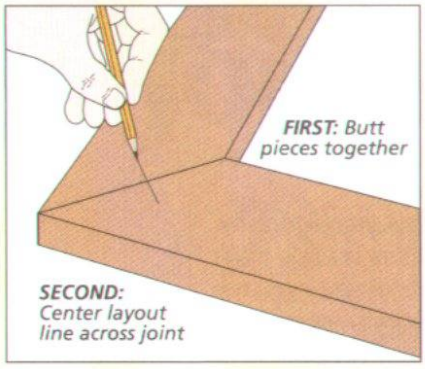

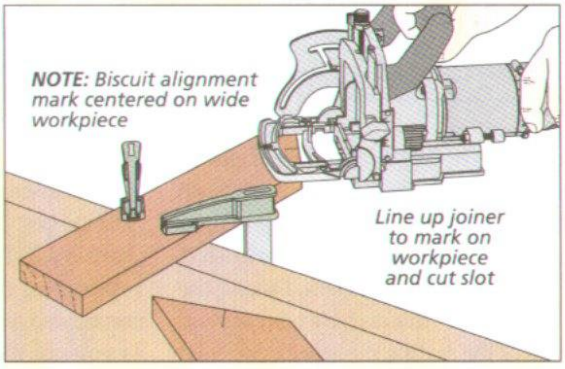

Beveled Corners

In many of the cases I build, I like to wrap a wide apron around the base (see opposite page). And like the mitered frame above, biscuits can strengthen the joint and keep it aligned during assembly.

Cutting the slots for this type of joint can be one of the more challenging aspects of using a biscuit joiner for a couple reasons.

ANGLE THE FENCE. First, you'll need to adjust the fence to match the miter angle of the workpiece. With some joiners, the fences reference the inside face of the workpiece. And other joiners, like the one shown here, trap the workpiece.

SET THE HEIGHT. Regardless of how your fence works, the thing you need to get right is the location of the slot you cut into the beveled end of the workpiece.

Instead of centering the slot on the face of the miter, set the fence so the slot is closer to the *inside* corner, like you see in the detail drawing at left. This way, you can use a larger biscuit without worrying about "blowing" through the outside face of the workpiece.

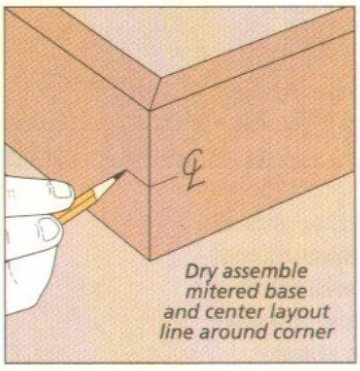

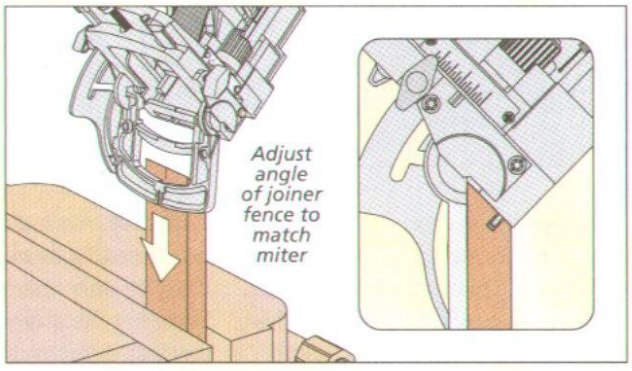

How-To: Offset Biscuit Joints

The goal of most biscuit joints it to end up with a perfectly flush joint along the face. But that's not the case with the offset joint you see in the photo at the far right.

With an offset joint, the goal is to position the face of the apron in slightly. To do this, all you need is a spacer the same thickness as the desired offset.

Since the fence doesn't rest directly on the apron, you'll need to mark the slot location on the spacer and then accurately clamp it in position each time. This way, you can be sure the top edge of the apron and the top of the leg will always end up flush.

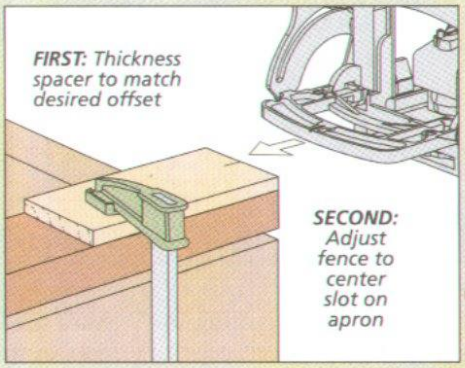

Start with the Apron. *With the spacer in place, adjust the biscuit joiner to cut a slot centered on the thickness of the apron.*

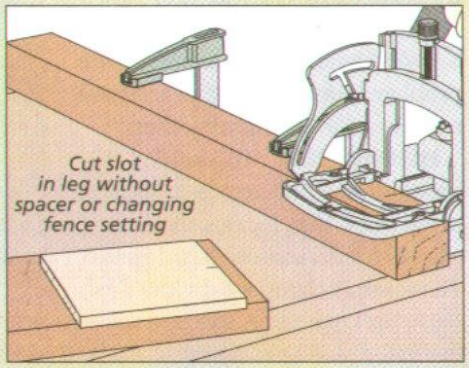

Leg Slots. *To cut the slots in the leg, you don't need to readjust the fence. Simply remove the spacer and cut the slots normally.*

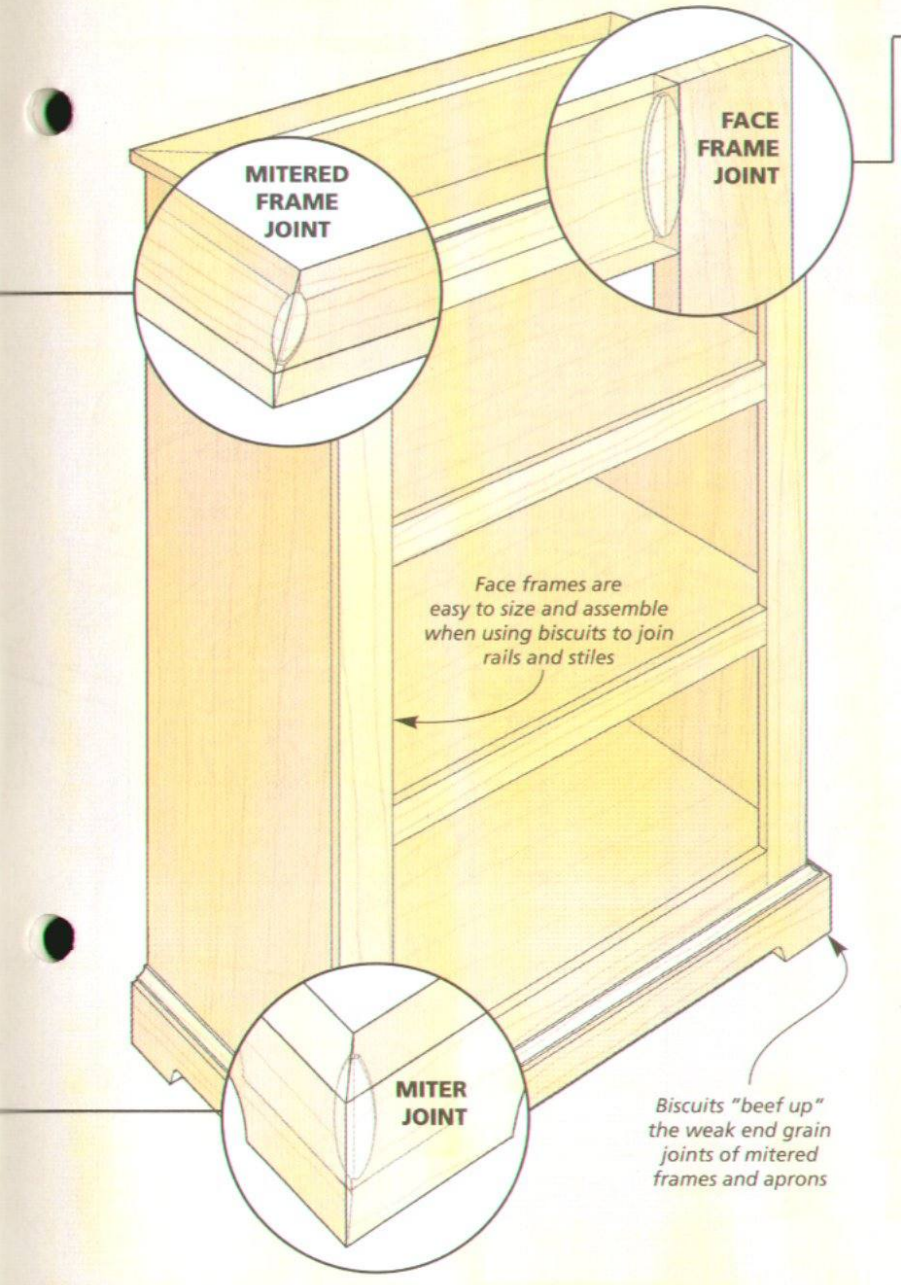

Face Frames

Although the face frame assembly you see here is shown last, it's probably one of the first things I used my biscuit joiner for. And the reason is simple — I don't have to worry about allowing for any "extra" joinery, like tenons. The rails and stiles of the frame simply butt together. This makes it easy to accurately size all the workpieces.

CUTTING THE JOINT. Making a face frame joint is like all the other ones shown here. First, dry assemble the pieces and draw a layout line across the joint, as in the first drawing below. Then just clamp each piece down and cut its slot (lower drawing).

WATCH THE WIDTH. The only time you may run into a problem is when you work with narrow pieces. Even using a #0 biscuit, the workpieces need to be at least 2¼" wide. Anything less and the slots will be exposed at the edges and show on the completed assembly. So it's always a good idea to center each layout line accurately on the ends of the rails.

ONE TOOL, MANY JOINTS. The next time you build a project, grab your biscuit joiner and give it a workout. As you can see, it's versatile enough to handle just about any challenge you throw at it. W

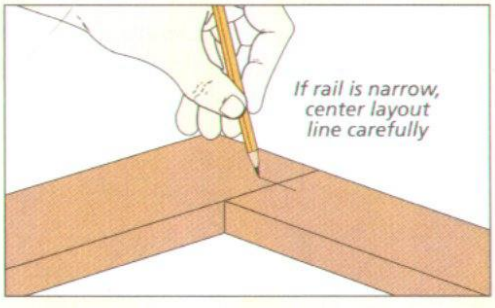

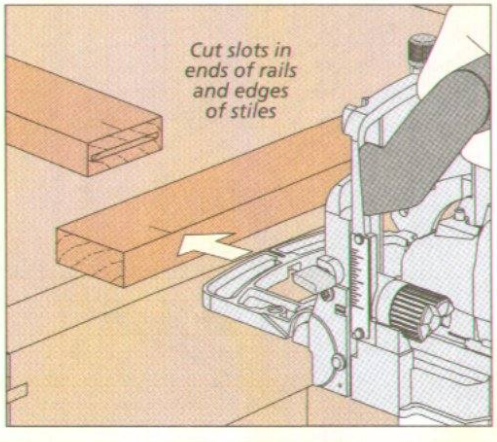

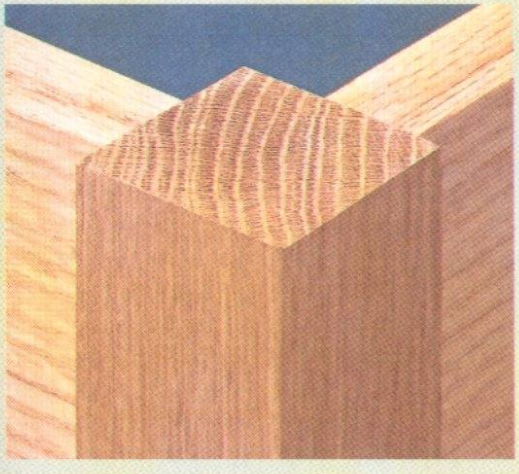

◄ A biscuit joiner can also be used to create an offset joint, as in the apron and leg assembly shown here. To avoid changing the setting of the fence between cuts, you can use a spacer to ensure that each offset ends up the same every time, like you see in the drawings on the opposite page.

1-Hour Workshop

6 Easy-to-Build Drill Press Accessories

A few simple jigs will help you deal with any drill press challenge.

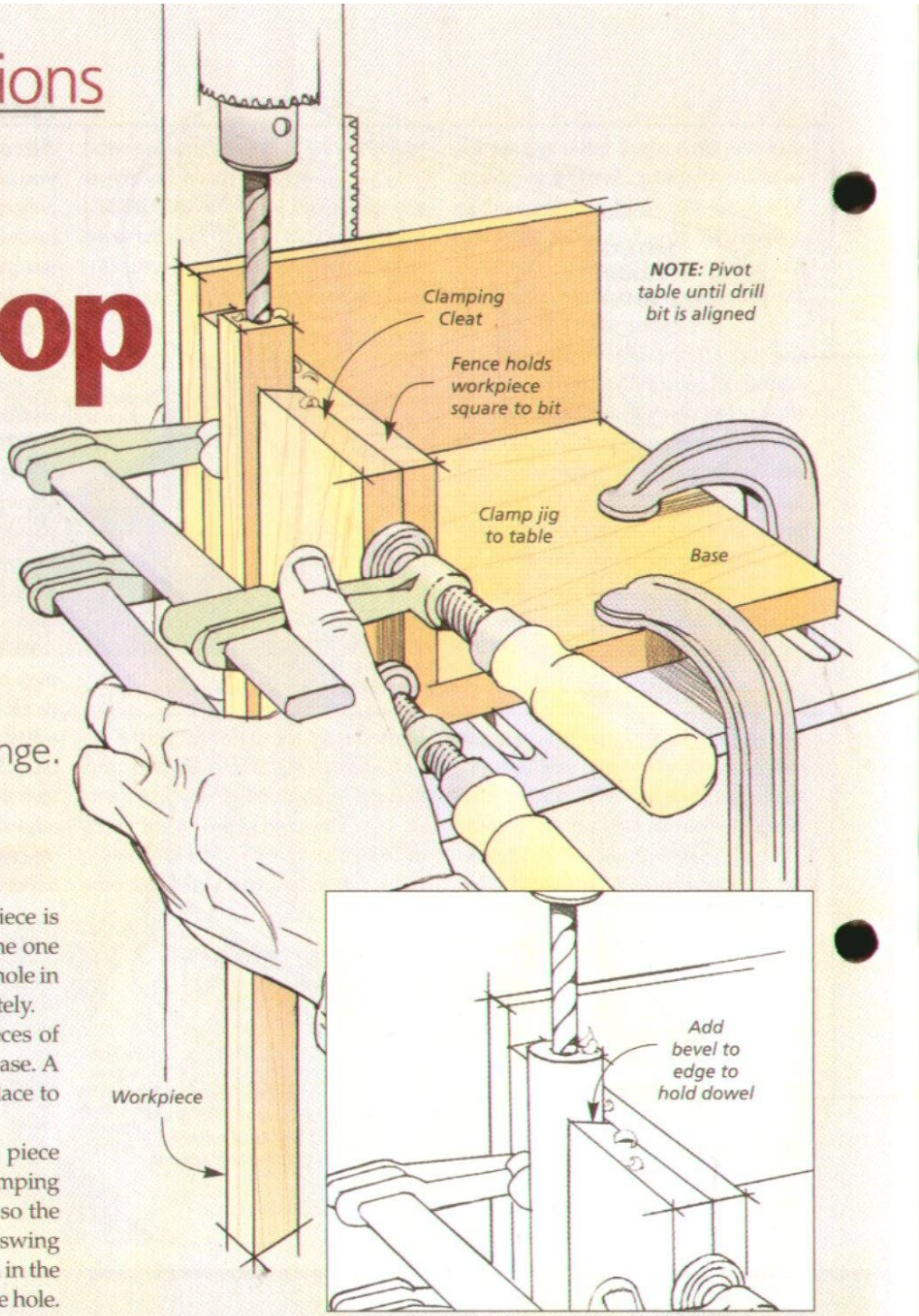

1 End Drilling Long Stock

Drilling holes in the end of a long workpiece is always a challenge. But with a simple jig, like the one shown in the illustration at right, you can drill a hole in the end of a your workpiece quickly and accurately.

The jig is nothing more than a couple of pieces of wood joined at a right angle and attached to a base. A cleat attached to the side of the jig provides a place to securely clamp the workpiece.

To use the jig, you'll want to first clamp the piece you're working with into position against the clamping cleat. Then, place the jig on the drill press table so the workpiece extends off the side of the table. Next, swing the table into position and align the bit, as shown in the illustration. Finally, set the depth stop and drill the hole.

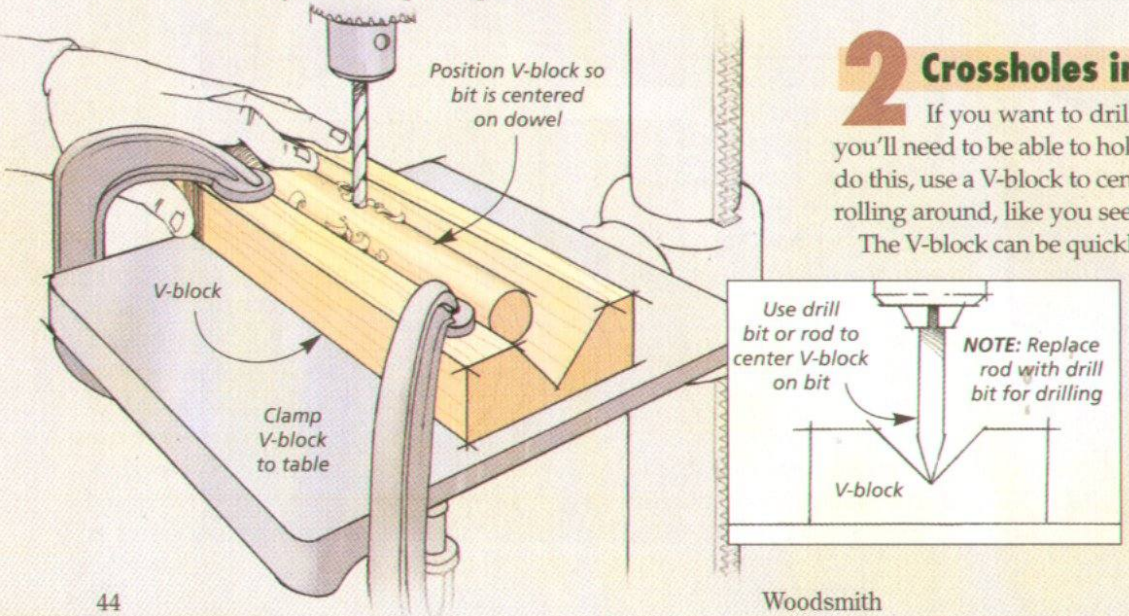

2 Crossholes in Round Parts

If you want to drill a crosshole in the side of a dowel, you'll need to be able to hold the dowel stable as you drill it. To do this, use a V-block to center the bit and keep the dowel from rolling around, like you see in the drawing at left.

The V-block can be quickly made from a piece of scrap wood. Just set your table saw blade at 45° and make a couple of quick passes.

To use the V-block, you'll first need to center the bit on the block. You can do this by inserting a pointed rod in the chuck and then aligning the point at the bottom of the V-block. Then clamp the block to the table, lay in the dowel, and drill.

3 Drilling Small Parts

Drilling a hole in a small workpiece is another problem you'll often find challenging. It's always difficult to get a clamp on these small pieces to safely drill the hole.

To make it easier, you can make an auxiliary table, like you see in the drawing at right. This table will allow you to hold the small piece securely while you're drilling.

As you can see, the auxiliary table is shaped like an I-beam. The top and bottom extend outward to give you clamping platforms. Holes drilled into the top and bottom pieces (so you can use either side) allow you to secure the table to the drill press with some carriage bolts and wing nuts. This keeps the table from twisting as you drill.

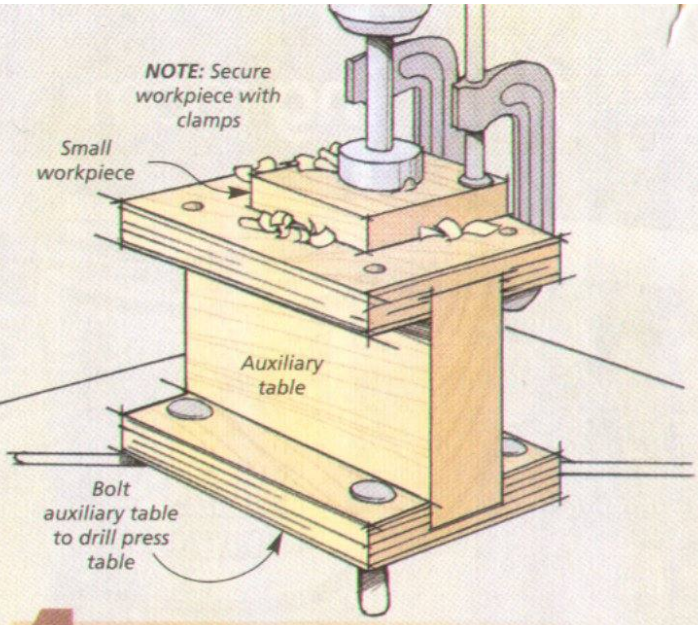

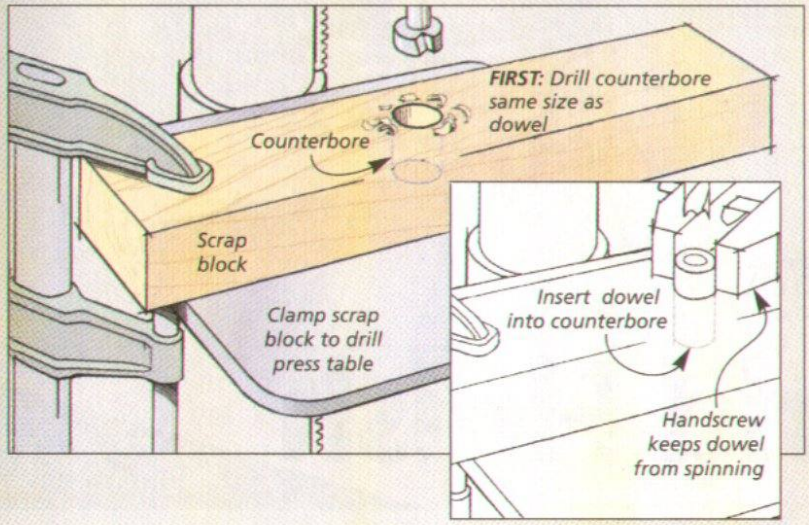

4 End Drilling Holes In Dowels

When it comes to drilling a centered hole in the end of a round workpiece, it's easy to be a little bit off. But a simple technique will perfectly center the hole.

Start by clamping a scrap block to the drill press table. Then counterbore a hole to match the dowel size.

Next, slip the dowel into the counterbore. It will now be perfectly centered under the tip of the drill bit. Then you can install a smaller drill bit and drill the hole through end of the dowel. To keep the dowel from spinning as you drill, you'll want to clamp a handscrew around it to hold it firmly in place (see inset illustration at left).

5 Enlarging Holes

Sometimes, you need to make an existing hole slightly larger, or add a counterbore after boring the pilot hole. But when you try to center the larger hole over the existing hole, there's nothing to support the bit as it enters the hole.

The key to solving this problem is to be sure you use the same centerpoint. Do this by chucking a bit the same size as the first hole in the drill. Then with the power off, you can lower the bit into the hole, as seen at right.

Finally, without moving the workpiece, replace the bit with a larger bit to redrill the hole to the size you need. The new hole will be perfectly centered on the original, smaller hole.

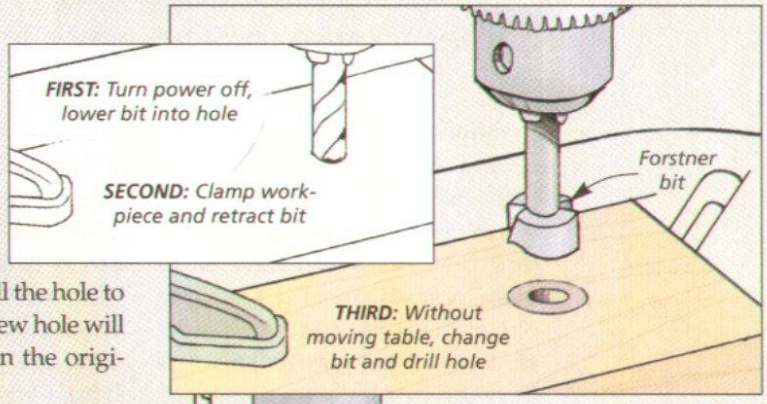

6 Evenly Spaced Holes

Projects that include shelves often require you to drill a number of evenly and accurately spaced holes for shelf supports. Whenever I need to do this, I use a simple indexing jig, like you see at right. This not only makes the job go faster, but it also ensures the holes are spaced consistently.

The jig is nothing more than an auxiliary fence with a set of holes drilled to match those of the project. A dowel index pin fits in the holes to position the workpiece. W

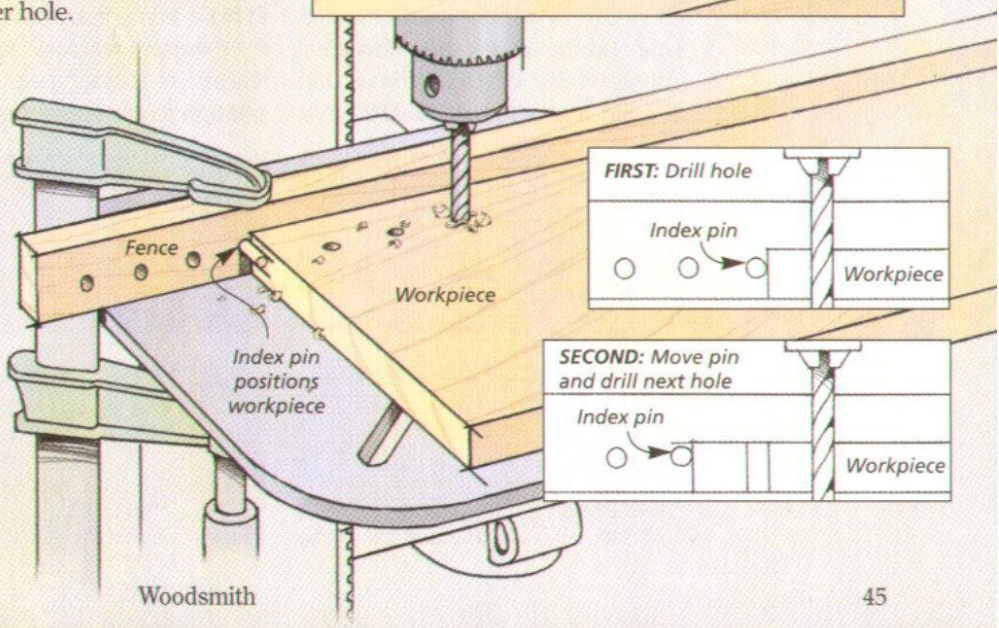

quick and easy Hybrid Finish

You've heard the old saying, "oil and water don't mix." Well, when it comes to an easy, top-notch finish, this partnership is just the ticket.

I think every woodworker is always on the lookout for the perfect wood finish. But the list of qualificatons for this title is pretty long. First, it would have to be quick, easy, and foolproof to apply. No grain raising and a minimum of sanding between coats. And then add in odorless with simple, safe cleanup afterwards. This ideal finish would dry quickly so that the job doesn't drag on for days. The result of your easy effort would be a smooth, durable film. And finally, it would offer a warm, pleasing color that brings out the beauty of the grain.

WIPING VARNISH. For a long time wiping varnish was the closest thing to a perfect finish I'd found. It has a pretty good list of pluses.

A wiping varnish is simply a varnish that's been thinned enough to eliminate the need for a brush. The application is as easy and trouble-free as it gets. You wipe on a coat, let it sit for a few minutes and wipe off the excess. But for me, the clincher is the warm, amber glow that an oil wiping varnish gives to the wood.

Unfortunately, wiping varnishes do have a few minor drawbacks. First, like all varnishes, they can be slow drying. You may have to wait a day between coats. And on top of

The examples at right compare a water-based finish applied over a wiping varnish (upper) with a water-based only finish (lower). As you can see, a single coat of oil varnish really enhances the look.

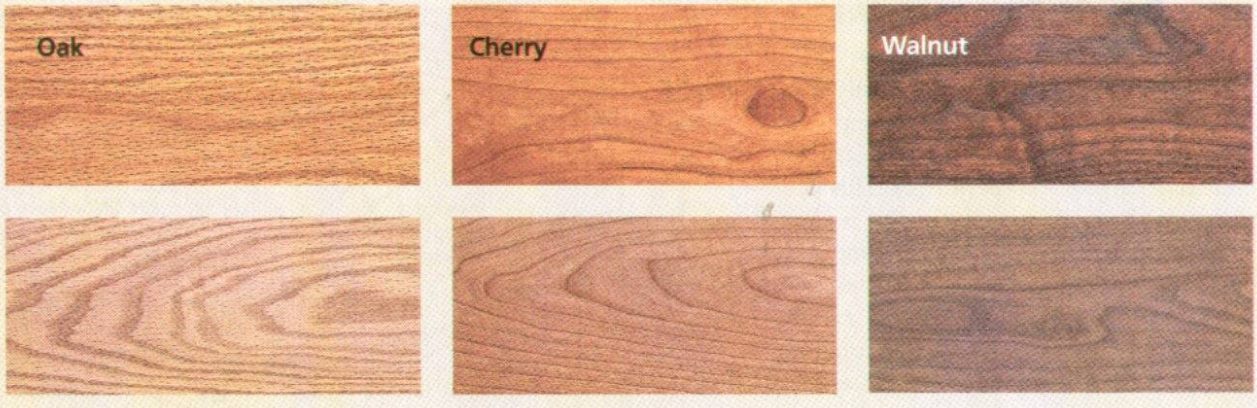

this, it takes a number of wiped-on coats to build up a protective film.

WATER-BASED FINISH. In recent years, water-based finishes have gained a lot of converts, me included. And for good reason. A brushed-on coat of water-based finish will dry in an hour and can be recoated in two. And after just three coats, you'll have a durable "build." Add in the bonus of low-to-no odor and easy water cleanup and you see why water-based finishes are appealing.

But as you might expect, water-based finishes aren't without their problems. When water hits wood, you can get raised, fuzzy grain. Usually, a little careful sanding will take care of this. But when a water-based finish raises the grain over a stain, you can be in for a pretty touchy sanding job.

But what I'll never get used to is the clear color that a water-based finish gives to the wood. It just doesn't add depth to the grain and leaves the wood looking bland.

HYBRID FINISH. So the question now is, which one do I use? Well lately, my answer has been, "both." By using a wiping varnish and a water-based finish together, you get a "hybrid" finish that has the best features of both types.

The technique involves starting with a single coat of wiping varnish. This seals the grain and provides the depth and color I want. When the wiping varnish is dry, two or three quick coats of water-based finish gives you a durable film with just the right build.

SEEING IS BELIEVING. Take a look at the sample photos across the bottom of the page, and you'll see what I mean about appearance. The top boards have a hybrid "oil and water" finish. The bottom pieces are finished with water-based only. In each case the starter coat of wiping varnish adds color and "pops" the grain.

With highly figured woods, like the curly maple in the far right photos, the difference can be really dramatic. Wipe on a coat of varnish and the figure of the wood jumps out. And even over a stain (look at the main photo on the opposite page) a quick coat of wiping varnish adds more depth and color.

A SIMPLE JOB. You can't ask for an easier process. A quick first coat of wiping varnish, allowed to dry overnight, gets you started. Sand lightly and you're ready to brush on water-based.

Good brushing technique is the key to success with water-based. The photos above show the basics. Generally, I've found that water-based finish flows out well and brush marks aren't a big problem. But if you're not careful, bubbles can be stirred up and trapped in the quick-drying film. The two keys to avoiding this problem are to use a good quality synthetic-bristle brush and then to avoid as much bubble-causing agitation as possible when brushing.

A FINAL WORD. You might wonder about the compatibilty of the oil varnish and the water-based finish. I've never had a problem with the products I use, but the safe approach is to do a quick test before jumping into the "water."

So who says oil and water don't mix? Give it a try and I think you'll be pleasantly surprised.

How-To: Brush On Bubble-Free

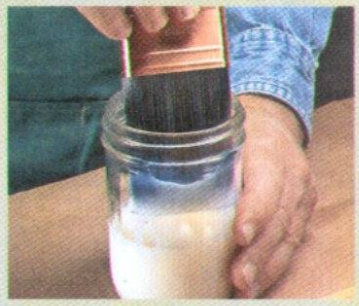

A No Bubbles Dip. *After dipping the brush, drain the excess finish by touching it to the side of the jar. Don't drag it across the lip.*

A Short Stroke. *On flat surfaces, start with a short stroke to the outside edge. This helps avoid drips and runs.*

Overlapping Strokes. *Now, the goal is to apply a full, wet coat of finish with long, smooth overlapping brush strokes.*

Use the Tip. *Before the finish begins to tack up, hold the brush upright and use the tip to smooth out any bubbles or brush marks.*

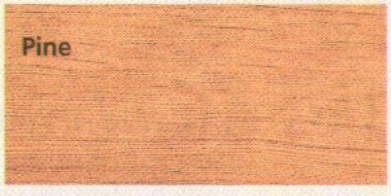

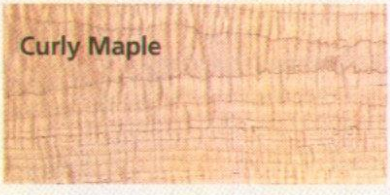

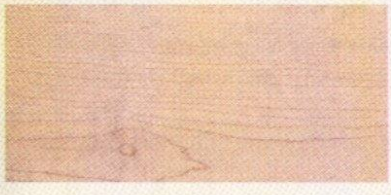

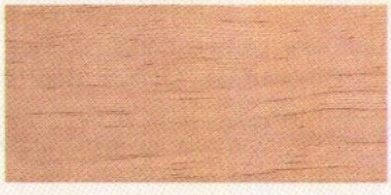

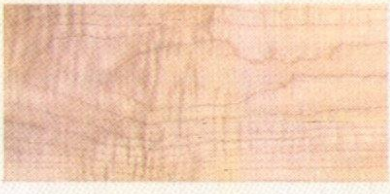

in the mailbox

Questions & Answers

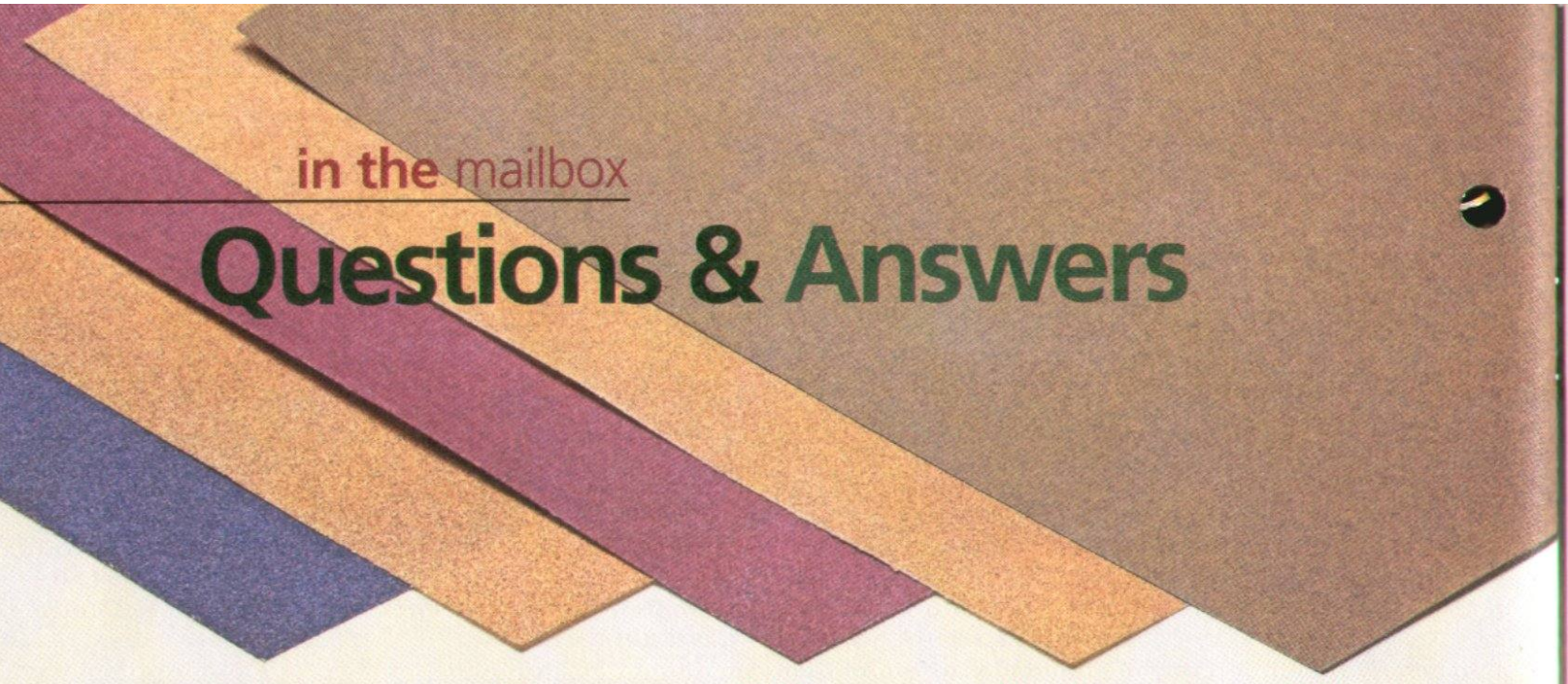

Sandpaper has True Grit

Q ***I always find buying sandpaper to be a little bit confusing. In some stores it's labeled as P-220, another just 220, and yet another will have it marked as "Fine." What's the difference?***

Frank Amick
Concord, Massachusetts

A Buying sandpaper can be a bit of a challenge. That's because there are basically two sandpaper grading systems in use in the U.S. and Canada today. And these two systems don't always match up consistently.

The standard scale in the U.S. is set by the Coated Abrasive Manufacturers Institute (CAMI). They designate sandpaper grades by a number (like 80, 220, etc.) based on the *average* size of the particles on the sandpaper.

The standard in Europe is set by the Federation of European Producers of Abrasives (FEPA). These sandpapers are graded based on an allowable *range* of the grain sizes on the paper. With this system you'll find the letter "P" in front of the number.

These systems are similar for larger grit sizes (up to about 240), but differ widely as you move into the finer grits. For example, you'll need to use P-800 to equal the CAMI 400 grit sandpaper.

Abrasive grains up to 220 are graded by sifting particles through screens with a specific number of openings per inch (180 grit has 180 holes/inch). The bigger particles are given smaller numbers and finer particles will have larger numbers. Finer grains (above 240) are separated by blowing air through them, spinning them out, or allowing them to settle in water.

Sometimes you won't find a numerical designation at all on the package. Instead, you'll see a descriptive label (like coarse, fine, and very fine). This is an attempt to help make the choice a little bit easier for consumers.

To help you make comparisons, take a look at the chart at right. It shows the sandpapers commonly used by woodworkers.

DESCRIPTION	CAMI	FEPA
Coarse	80	P80
	100	P100
	120	P120
	150	P150
	180	P180
Fine	220	P220
	240	P240
	—	P280
	—	P320
	280	—
Very Fine	320	—
	—	P400
	—	P500
	360	—
	—	P600
	400	—
	—	P800
Extra Fine	500	—
	—	P1000
	600	—
	—	P1200

Do you have any questions for us?

If you have a question related to woodworking techniques, tools, finishing, or hardware, we'd like to hear from you.

Just write down your question and mail it to us: Woodsmith Q&A, 2200 Grand Avenue, Des Moines, Iowa 50312. Or you can email us the question at: woodsmith@woodsmith.com.

Please include your full name, address, and daytime telephone number in case we have questions.

Sources

CRAFTSMAN SIDEBOARD

You won't need to find a lot of hardware to build the Craftsman sideboard on page 28. The nylon stem bumpers (28373) I used for the drawers came from *Rockler*. And I was able to order the Mission-style drawer pulls (01G62.40) from *Lee Valley*.

You can apply any finish you like to the sideboard. I chose to use the *"Candlelight"* gel stain made by *General Finishes*. You'll find distributor information in the right margin. The stain is also available at the *Woodsmith Store*. I followed the stain with the "hybrid" finish described in the article on page 46.

MEASURING TAPES

New measuring tapes, like those on page 10, have turned this shop necessity into a multi-functional tool. I ordered the *FastCap* tapes from *McFeely's*. They include the *Lefty/Righty* tape (FSC-4020), *Story Pole* tape (FSC-4022), and *FlatBack* tape (FSC-4024). The center-finding tape (25N10.16) and large print *"Blindman's"* tape (50K16.01) came from *Lee Valley*. You'll also find most of these tapes at the *Woodsmith Store*.

If you want to eliminate reading error, you'll want to give the new digital measuring tape made by *Starrett* a try. The information in the right margin will help you locate a distributor or retail store in your area.

DESKTOP BOOK RACK

You'll only need a couple of hardware items to build the desktop book cradle from page 16. The brass knurled knob (70003) and the 1/4-20 threaded inserts (33183) all came from *Rockler*. The rest of the materials can be readily found at your local woodworking store or home center.

ROUTER PLUNGE BASE

The addition of a precision plunge base to your palm router will most definitely improve the accuracy of the cut. You'll need to order the *Micro Fence* plunge router base directly from the manufacturer. The contact information can be found in the right margin.

I ordered the *Trend T3* router from *Klingspor's Woodworking Shop*. You can get the router and plunge base for about $80.

MESSAGE CENTER

Building the information center on page 20 doesn't require a lot of hardware. Most of the items you'll need can found be at any hardware store or woodworking store. The keyhole hangers and galvanized steel for the chalkboard were purchased at a local home improvement center.

I ordered the 1½" x 1½" brass hinges (7665ZA) that I used for the lid from *Rejuvenation Hardware*. Information for ordering these hinges is listed in the margin at the right.

You'll also need paint to make the chalkboard. I got the chalkboard paint I used at a *Benjamin Moore* dealer. The information in the margin will help you find the nearest store. You'll also find it at the *Woodsmith Store*.

If you add hooks for keys, the 7/8"J-Hooks (00H27.30) that are shown on the back cover can be ordered from *Lee Valley*.

STEEL WOOL

Steel wool can be found at just about any hardware store. But the *Liberon* steel wool is a little harder to find. We ordered ours from from *Rockler* (35161).

Online Customer Service

Click on Subscriber Services at
www.woodsmith.com

- Access your account status
- Change your mailing or email address
- Pay your bill
- Renew your subscription
- Tell us if you've missed an issue
- Find out if your payment has been received

MAIL ORDER SOURCES

Similar project supplies may be ordered from the following companies:

Woodsmith Store
800-444-7527
woodsmithstore.com
Chalkboard Paint, FastCap Measuring Tapes, General Finishes Stains, Stem Bumpers, Knurled Knobs, Threaded Inserts

Rockler
800-279-4441
rockler.com
Knurled Knobs, Liberon Steel Wool, Stem Bumpers, Threaded Inserts

Micro Fence
800-480-6427
microfence.com
Plunge Router Base

McFeely's
800-443-7937
mcfeelys.com
FastCap Measuring Tapes

Klingspor's Woodworking Shop
800-228-0000
woodworkingshop.com
Trend T3 Router

Lee Valley
800-871-8158
leevalley.com
Drawer Pulls, Key Hooks, Measuring Tapes

Starrett
978-249-3551
starrett.com
Digital & Standard Measuring Tapes

Rejuvenation Hardware
888-401-1900
rejuvenation.com
Brass Hinges

Benjamin Moore Paint
benjaminmoore.com
Chalkboard Paint

General Finishes
800-783-6050
generalfinishes.com
Wood Stains & Finishes

Woodworkers Supply
800-645-9292
woodworker.com
General Finishes Stains, Liberon Steel Wool

WOODSMITH PROJECT SUPPLIES

We now feature hardware from **ROCKLER** in many of our new project kits. To order, please use our toll-free order line, see below. It's open Monday through Friday, from 8 AM to 5 PM Central Time. Before calling, please have your VISA, MasterCard, Discover, or American Express card ready.

If you would prefer to mail in an order, please call the toll-free phone number below for more information concerning shipping charges as well as any applicable sales tax.

Woodsmith *on the web*

- "Online Extras" - Plans, Patterns, & More
- Over 100 Woodworking Tips Online
- Visit Our Readers' Project Photo Gallery
- Project Plans You Can Download
- Catalog of Project Kits, Tools, Jigs, & Plans
- Forums for Woodworking, Tools, & Classifieds
- Links to Other Woodworking Sites
- Order *Woodsmith* & *ShopNotes* Bound Volumes

Call us at 1-800-444-7527 or online at www.woodsmith.com

different methods for Attaching a Top

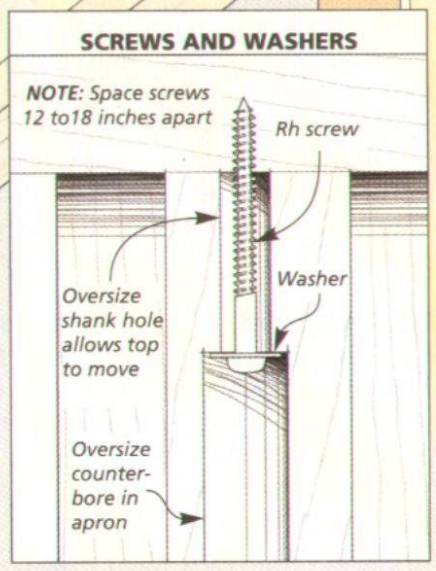

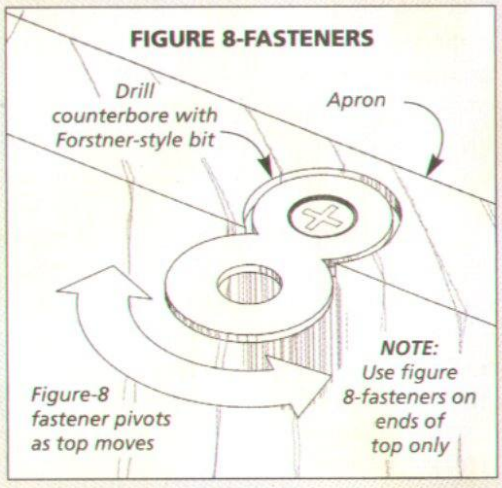

When it comes to building fine furniture projects, I've always taken the approach that there's no substitute for traditional joinery. Nails, screws, and other mechanical fasteners just don't hold a candle to a well-executed woodworking joint. But there's one situation where it's nearly impossible to avoid mechanical fasteners, and that's when you're attaching a table top.

WOOD MOVEMENT. Attaching a solid-wood top to a table presents an unusual challenge. On one hand, you want to make sure the top is securely fastened so that it won't accidentally come loose if someone lifts the table by the top alone. But since the top will expand and contract with seasonal changes in humidity, you also have to fasten it to the base in such a way that it can "move" without splitting or cracking.

At first, these two goals might seem contradictory. But there are actually several ways of attaching a top that still allow the top some "breathing" room.

SCREWS. The simplest way is to screw the top directly to the base. This usually involves driving screws up through an apron or rail into the underside of the top. In order to give the top some room to move, I drill oversize shank holes for the screws, as shown in the detail drawing above. This way, as

How-To: Choosing a Screw

Almost as important as the type of hardware you use is the type of screw you use with it. Most wood screws have threads along only a portion of their shank. But sheet metal screws are threaded along the entire length of the shank. So they "bite" into the wood a little more for a stronger grip.

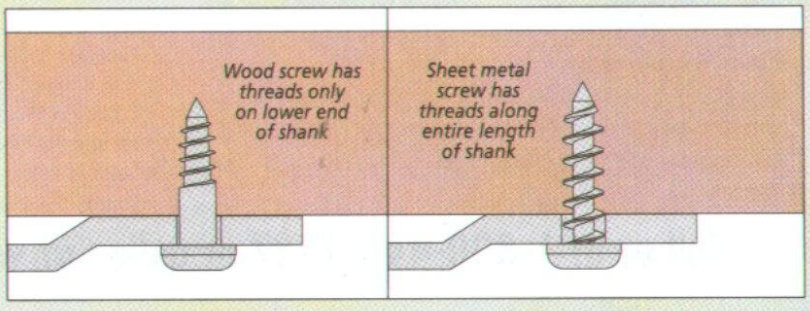

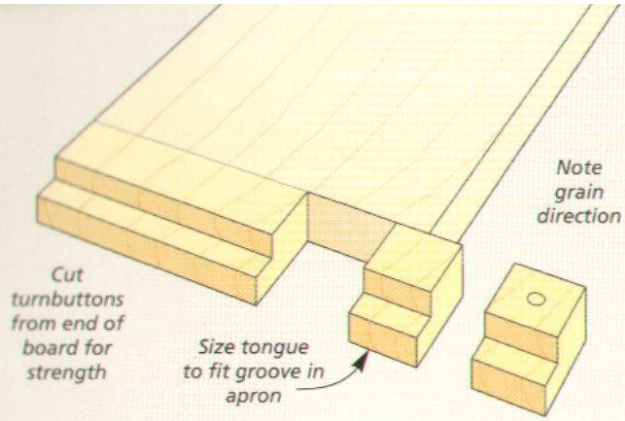

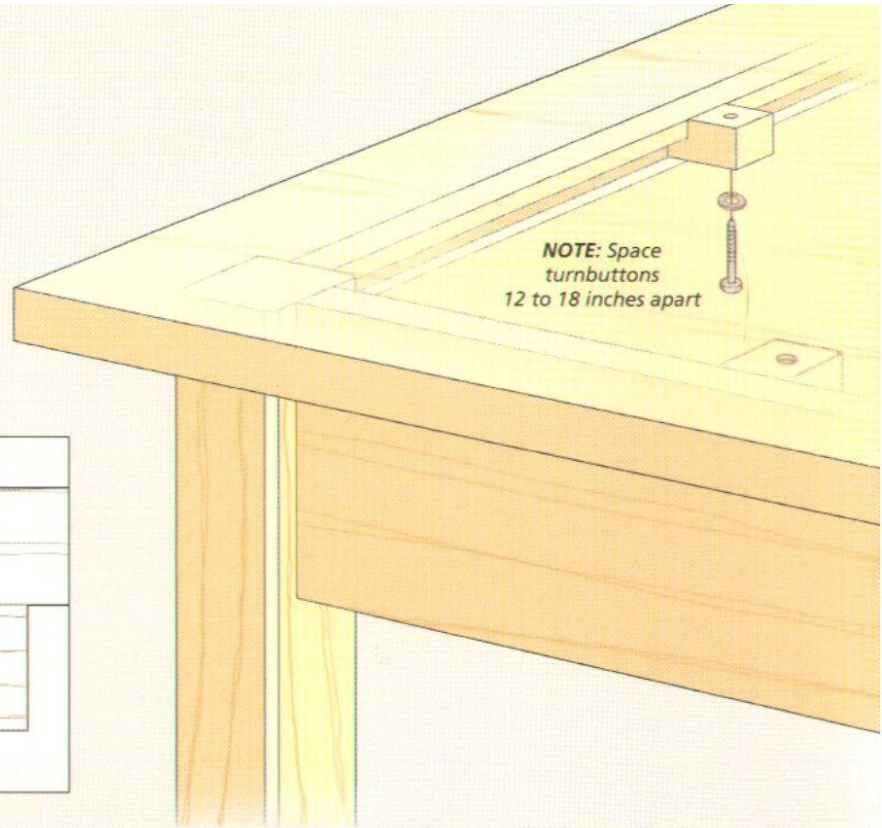

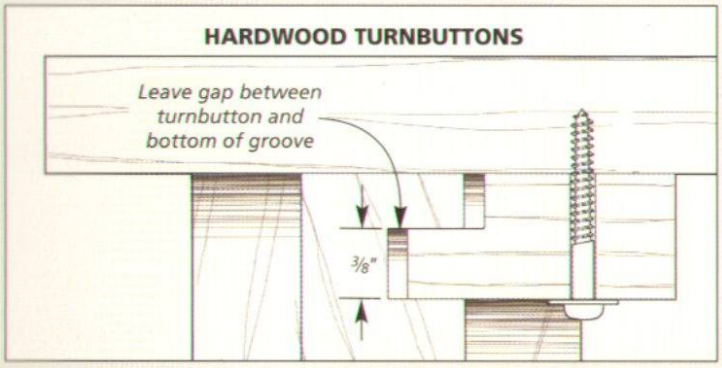

the top shrinks or expands, the screws have a little "wiggle" room.

FIGURE-8 FASTENERS. Another method of allowing for expansion and contraction of a table top are figure-8 fasteners. These fasteners are inexpensive and fairly easy to install. You simply drill a shallow mortise in the top edge of the apron, screw the fastener in place, and then attach the top. The shape of the fasteners allows them to pivot as the top expands and contracts. You can use these fasteners on the inside or the outside of the apron, depending on accessibility and whether or not you object to them being seen.

TURNBUTTONS. Screws and figure-8 fasteners are both quick and easy methods for attaching a top. But for heirloom-type projects, I like to use a couple of different methods for attaching the top.

One of these is to use traditional "turnbuttons" like the ones shown above. These are nothing more than small blocks of wood with a tongue on one end. The tongue fits into a shallow groove that's cut on the inside face of the aprons.

The idea is that as the table top expands and contracts, the turnbuttons are free to slide within the groove. It's a simple idea that works elegantly.

Z-FASTENERS. Z-fasteners are really just a metal version of the turnbutton (see drawing below). In this case, the fastener fits into a narrow kerf that is cut in the inside face of the apron. But they work the same way. They hold the top securely to the base of the table, but they can still shift laterally within the kerf, allowing the top to move.

One last note. No matter which method you choose, it's a good idea to periodically check and tighten the screws holding the top to the table. Over time, the expansion and contraction of the top can work them loose. W

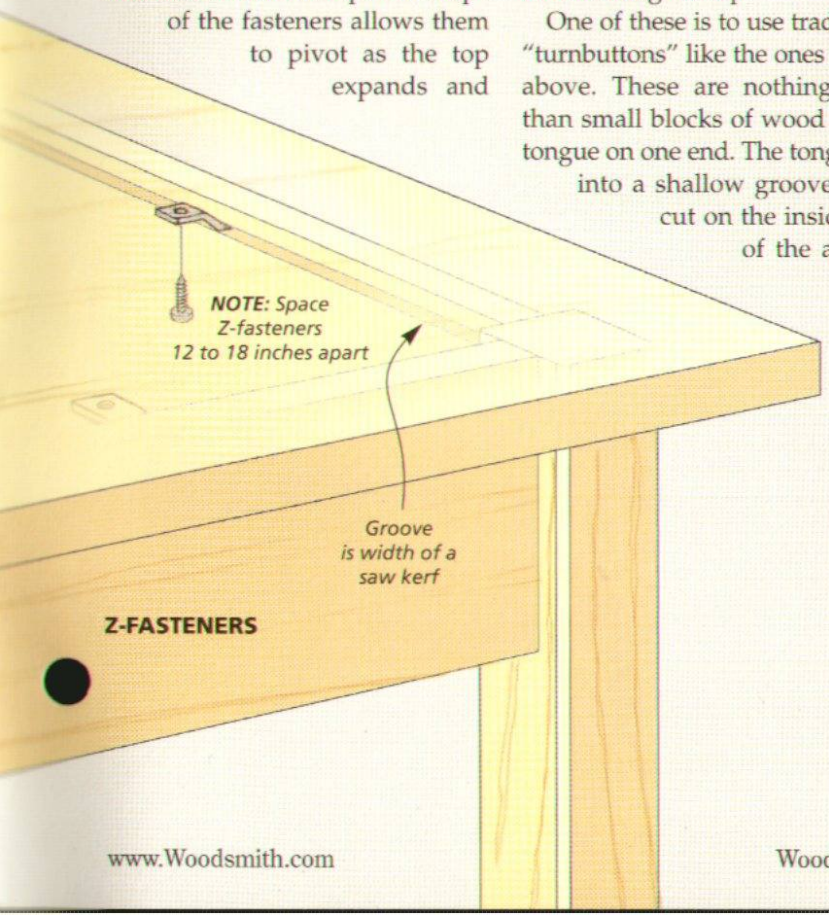

Z-FASTENERS

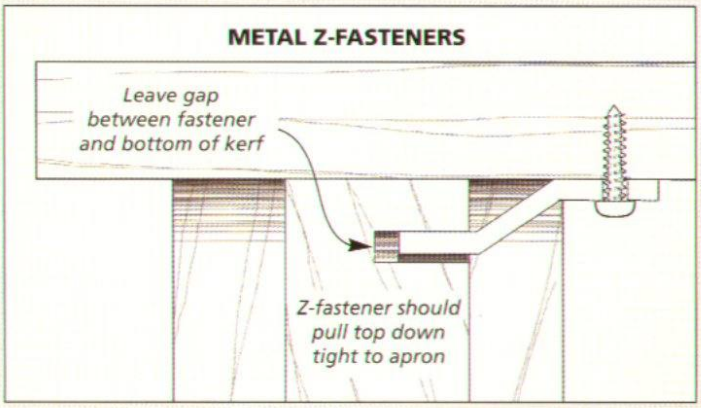

looking inside
Final Details

▲ *Message Center.* Keep everyone in your family up to date. Choose one of two styles to make. The narrow message center shown above works great when space is tight. Or, you can build the full-sized version. We'll even show you how to make a magnetic chalkboard. Check out the detailed plans on page 20.

▲ *Desktop Book Rack.* Just about every room of the house could use a place like this to organize a few books. And this small rack will do the trick. Best of all, it only takes a few boards and a weekend to build. To find the easy-to-follow plans, turn to page 16.

▲ *Craftsman Sideboard.* Strong, traditional joinery make this an heirloom quality project. You'll find this sideboard is big on storage with Craftsman details like clean lines, distinctive hardware, and quartersawn oak, yet doesn't take up a lot of space. The step-by-step plans begin on page 28.